YL Ver2020

Yi-lift Material Handling Equipment Co.,Ltd.

Your Reliable Source For Material Handling Equipments

2020

¤ Pallet Truck & High Lift ¤ Weighing system ¤ Stacker

ChangzhouYi-Lift material handling equipment co.,Ltd, is a professional logistic and industrial equipments manufacturer in China for more than 30years. The product range covers manual and electric pallet trucks, stackers, mobile and stationary lift tables, weighing trucks, roller skates and all kinds of trolleys.

Our company owned a complete line of advanced equipments, such as CMM machines, welding Robots, CNC cutting machine, Auto Power coating line, Hydraulic Press and Testing machine etc. We have professional technical team in designing and producing which can meet the different requirements from customers. And we are an ISO9000 quality certified company which ensures all products and service is complied with standard quality system. Most of our products are also granted CE or GS certificates by TüV Rheinland Group.

We cooperated with Hu-lift since year 1992 to export our products all over the world. We acted as the original equipment manufacturer (OEM) for many worldwide enterprises such as Linde, Still, Manitou on pallet trucks, and we are also important supplier to some famous catalogue companies such as Grainger, Manutan, Kaiser+Kraft, Global, Fastenal, usco and AJ.

Yi-Lift team are always ready to provide not only quality products but also our prefect customer service, our professional work is worth to be rely on!

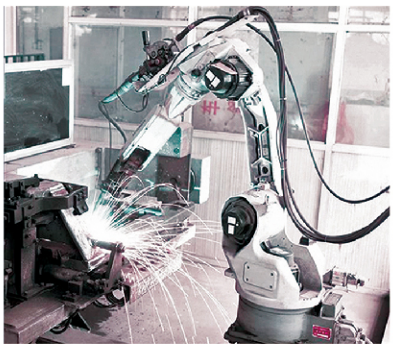

CONTENTS

Pallet Truck & High Lift

001 ~ 025

Weighing system

026~ 031

Stacker

032 ~ 080

OPTION (Handle, Wheel, Brake, Pump)

Steel | Steel with Rubber Cover | Steel | Steel with Rubber Cover | Ergonomic Plastic | Hand Brake | Deadman Brake Handle with Brake

Polyurethane | Nylon | Rubber | Polyurethane | Nylon | Polyurethane | Foot Brake | HP Pump | CA Pump | BST Pump

Hand Pallet Truck HP series

One of best selling in the world.

- A built in overload valve and totally sealed hydraulic pump.
- German seal kit offers long span life of pump for 3 years warranty.
- Heavy duty and reinforced forks for greatest strength and durability.
- Guide rollers offer easier entry and exit.
- Maintenance free oiless bushings at key points offer you less operating force and longer life span.
- Conforms to EN1757-2.

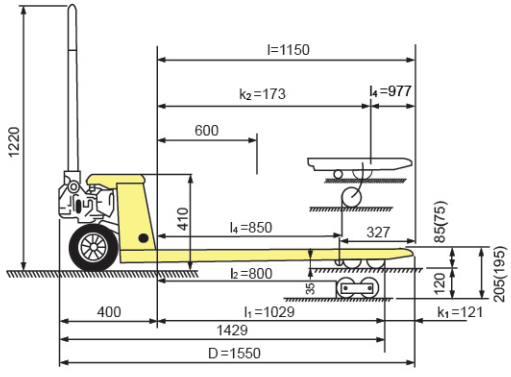

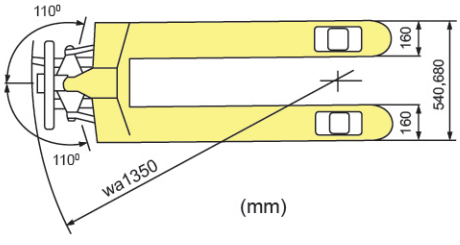

Model		HP20S	HP20L	HP25S	HP25L	HP30S	HP30L
Capacity	(kg)	2000	2000	2500	2500	3000	3000
Max. Fork Height	(mm)	205 (or 195)	205 (or 195)	205 (or 195)	205 (or 195)	205 (or 195)	205 (or 195)
Min. Fork Height	(mm)	85 (or 75)	85 (or 75)	85 (or 75)	85 (or 75)	85 (or 75)	85 (or 75)
Fork Length	(mm)	1150	1220	1150	1220	1150	1220
Width Overall Forks	(mm)	540	680	540	680	540	680
Individual Fork Width	(mm)	160	160	160	160	160	160
Load Roller	Dia.xWidth (mm)	Φ80×70 (or Φ70×70) Nylon, Polyurethane					
Steering Wheel	Dia.xWidth (mm)	Φ200×50 (or Φ180×50) Nylon, Polyurethane, Rubber					
Net Weight	(kg)	78	82	80	84	85	89
Quick Lift (6 pump strokes)		HPQ20S	HPQ20L	HPQ25S	HPQ25L	HPQ30S	HPQ30L
With Hand Brake		HPH20S	HPH20L	HPH25S	HPH25L	HPH30S	HPH30L
With Deadman Brake		HPD20S	HPD20L	HPD25S	HPD25L	HPD30S	HPD30L
With Foot Brake		HPJ20S	HPJ20L	HPJ25S	HPJ25L	HPJ30S	HPJ30L

Hand Pallet Truck BST series

- Ergonomic handle!
- New fork design ensures 25% more strength than standard fork.
- New adjustable push rod !
  Extremely easy to adjust push rod without turn the truck.

Model		BST2053	BST2068	BST2553	BST2568	BST3054	BST3068
Capacity	(kg)	2000	2000	2500	2500	3000	3000
Max. Fork Height	(mm)	205 (or 195)	205 (or 195)	205 (or 195)	205 (or 195)	205 (or 195)	205 (or 195)
Min. Fork Height	(mm)	85 (or 75)	85 (or 75)	85 (or 75)	85 (or 75)	85 (or 75)	85 (or 75)
Fork Length	(mm)	1150	1220	1150	1220	1150	1220
Individual Fork Width	(mm)	150	150	150	150	160	160
Width Overall Forks	(mm)	530	685	530	685	540	680
Net Weight	(kg)	75	78	77	80	85	88

Hand Pallet Truck AC series

NEW

- Rubber coated handle comfortable even under extreme temperature conditions.
- Fully sealed hydraulic unit housing.
- Single valve cartridge for easy maintenance.
- Powder coated chassis made of high grade steel.
- Conforms to EN1757-2.

Model		AC25S	AC25L	AC30S	AC30L
Capacity	(kg)	2500	2500	3000	3000
Max. Fork Height	(mm)	200 or 190	200 or 190	200 or 190	200 or 190
Min. Fork Height	(mm)	85 or 75	85 or 75	85 or 75	85 or 75
Fork Length	(mm)	1150	1220	1150	1220
Fork Overall Width	(mm)	540	685	540	685
Fork Width	(mm)	160	160	160	160
Front Wheel	(mm)	Ø80x70 or Ø74x70, Nylon, Polyurethane			
Steer Wheel	(mm)	Ø200 or Ø180x50 Nylon, Polyurethane, Rubber			
Net Weight	(kg)	75	78	78	81

AC25S

Hand Pallet Truck DF series

NEW

- Bushings at key points.
- Super strong steel structure frame.
- Tapered fork tips with entry guide roller.
- Fully adjustable push rods on forks.
- Conforms to EN1757-2.

Model		DFE15	DFE20	DF20	DF25	DF30
Capacity	(kg)	1500	2000	2000	2500	3000
Max. Fork Height	(mm)	175	200 or 195	200 or 195	200 or 195	200 or 195
Min. Fork Height	(mm)	75	85 or 75	85 or 75	85 or 75	85 or 75
Fork Length	(mm)	1200	1150	1150	1150	1150
Width Overall Forks	(mm)	460/530/650	520/550/685	450/520/550/685	450/520/550/685	450/520/550/685
Individual Fork Width	(mm)	130	160	160	160	160
Load Roller	Dia.xWidth (mm)	Ø70 Single Nylon or Polyurethane	Tandem Ø80×70 or Ø74×70, Single Ø80×93 or Ø74×93 Nylon, Polyurethane			
Steering Wheel	Dia.xWidth (mm)	Ø160×45 Nylon or Ployurethane	Ø200×50 or Ø180×50 Nylon, Polyurethane, Rubber			
Net Weight	(kg)	50	60	62	64	80

Low Profile Pallet Truck HPL/HPM series

- Super low pallet: 55/36mm.

Model		HPL20S	HPL20L	HPM10S	HPM10L
Type		Low Profile		Super Low	
Capacity	(kg)	2000	2000	1000	1000
Max. Fork Height	(mm)	170	170	95	95
Min. Fork Height	(mm)	55	55	36	36
Fork Length	(mm)	1150	1220	1150	1200
Fork Overall Width	(mm)	540	680	540	680
Net Weight	(kg)	75	79	70	74

Rollers: Polyurethane
Wheels: Nylon, Polyurethane, Rubber

Galvanized Pallet Truck HPG / Stainless Pallet Truck HPS

- Latest galvanizing technology offers long lif
- SUS 316L (HPS).
- Rollers/Wheels: Nylon.

HPG

HPS

Model		HPG20S / HPS20S	HPG20L / HPS20L	HPG25S	HPG25L
Capacity	(kg)	2000	2000	2500	2500
Max. Fork Height	(mm)	205 (195)	205 (195)	205 (195)	205 (195)
Min. Fork Height	(mm)	85 (75)	85 (75)	85 (75)	85 (75)
Fork Length	(mm)	1150	1200	1150	1200
Fork Overall Width	(mm)	540	680	540	680
Fork Width	(mm)	160	160	160	160
Net Weight	(kg)	75	78	78	81

5 tonne Pallet Truck HP50S

- Heavy duty design for moving heavy load.
- Unique hydraulic pump with less effort to lift heavy load easily.

Load roller: d=Φ80×68mm, tandem steel
Steering wheel: D=Φ200×50mm, steel

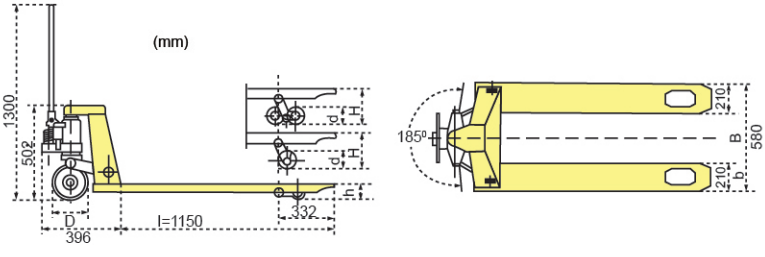

Model		HP50S	HP50L
Capacity	(kg)	5000	5000
Max. Fork Height	H (mm)	200	195
Min. Fork Height	h (mm)	90	85
Fork Length	l (mm)	1150	1150
Fork Overall Width	B (mm)	580	550
Fork Width	b (mm)	210	
Over Size	L×W×H (mm)	1546×588×1300	1550×558×1300
Net Weight	(kg)	192	175

Four Way Pallet Truck HPF series

- Unique 4-direcional movement capacity provides the flexibility to maneuver wide loads through standard aiales.
- An additional set of wheels allows pallet truck to be moved sideways in addition to be the conventional forward and back directions.
- Move heavy loads, quickly and effortlessly, with convenient hydraulic power and industrial quality features.
- Trucks are constructed of 4mm thick steel with reinforced fork bracing.
- Include sealed ball bearings on wheels that are permanently lubed and polyurethane coated.
- Handle has a cushin grip with a 3-position lever.

Capacity: 2000kg at fork height from 85 to 175mm.
1200kg at fork height from 185 to 205mm.

Model		HPF12S	HPF12L
Capacity	(kg)	2000/1200	2000/1200
Max. Fork Height	(mm)	205	205
Min. Fork Height	(mm)	85	85
Fork Length	(mm)	1150	1150
Width Overall Forks	(mm)	540	680
Rear Wheel	(mm)	Ø200	Ø200
Net Weight	(kg)	75	78

Roll Pallet Truck HR series

- For handling roll of paper, carpet, textile or other materials.

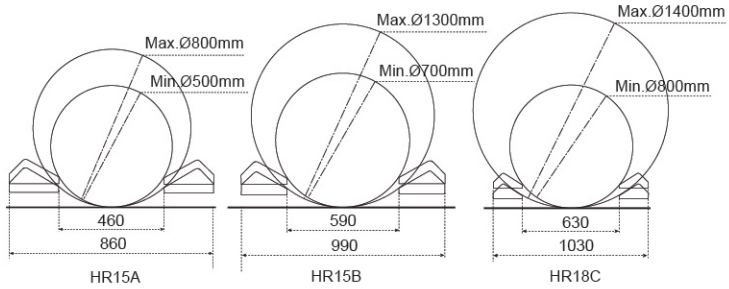

Model		HR15A	HR15B	HR18C
Capacity	(kg)	1500	1500	1800
Roll Diameter	(mm)	Ø500-800	Ø700-1300	Ø800-1400
Max. Roll Length	(mm)	1500	1500	1500
Fork Overall Width	(mm)	860	990	1030
Fork Length	(mm)	1350	1350	1350
Rear Wheel	(mm)	Ø200	Ø200	Ø200
Net Weight	(kg)	30	140	155

Hand Pallet Truck SAC30

SAC series trucks are specially designed for supermarkets. The warehouses is dedigned for transporting goods. Material selection Made of reinforced steel,strong and durable.The shape is exquisite and beautiful.

Model	SAC30
Capacity	300kg
Pump	AC integratted pump
Wheel	PU/RU/Nylon
Steering wheel size	200/180×50 Nylon/PU/RU/Rubber
Single loading wheel size	Nylon/PU wheel 80×93-74×93
Double loading wheel size	Nylon/PU wheel 80×70-74×70
lift	110-115mm
Max. lifting height	195-200mm
Min. lifting height	75/85mm
Width of outer fork	450/520/540/685mm
Length of fork	1150/1220mm
Steel thickness after painting	3.75mm
Ribbing	No tendons
Handle	Rubber packaged handle
Entry roller	Standard

Low-profile Hand Pallet Truck SAC51

SAC low-profile manual hydraulic pallet truck is suitable for pallet that is less than 51mm above the ground and space is narrow. At the same time ,it has all the characteristics of ordinary hydraulic trucks. .

Model	SAC51 Low-profile
Capacity	2000kg
Pump	AC integratted pump
Wheel	PU/RU/Nylon
Steering wheel size	180×50 Nylon/PU/RU/Rubber
Single loading wheel size	Nylon/PU wheel 85×93
Double loading wheel size	Nylon/PU wheel 50×70
lift	105mm
Max. lifting height	156mm
Min. lifting height	51mm
Width of outer fork	540/685mm
Length of fork	1150/1220mm
Steel thickness after painting	3mm
Ribbing	No tendons
Handle	Rubber packaged handle
Entry roller	--

Hand Pallet Truck HM6 series

One of best selling in the world.

- A built in overload valve and totally sealed hydraulic pump.
- German seal kit offers long span life of pump for 3 years warranty.
- Heavy duty and reinforced forks for greatest strength and durability.
- Guide rollers offer easier entry and exit.
- Maintenance free oiless bushings at key points offer you less operating force and longer life span.
- Conforms to EN1757-2.

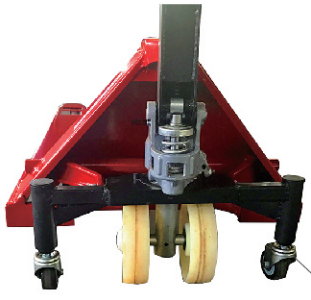

Option-Support wheels

Option-Support wheels

Model		HM6	HM7F (The casting pump is most popular in the market)
Capacity	(kg)	2500KG	2500KG
Max. Fork Height	(mm)	75	80
Min. Fork Height	(mm)	190	190
Max.Lifting Height	(mm)	≥110	≥110
Fork Outside Distance	(mm)	680	550/680
Fork Length	(mm)	1200	1150/1200
Fork Size	(mm)	150x50	150x50
Load Double Wheel	(mm)	Φ72x70	Φ72x70
Steering Wheel	(mm)	Φ180x50	Φ180x50
Material of Wheel		Nylon/PU	Nylon/PU
Type/Size		680X1200MM(27"X48")	550x1150 /680X1200 /2.5T （3T加￥30.00/台）
Pump		OPK Welding Pump,DF Pump,AC Pump	Casting Pump
Packing		1.6pcs/pallet,680-144pcs/1x20"container 2.6pcs/pallet,680-324pcs/1x20"container	1.6pcs/pallet,550--180pcs/680-144pcs/1x20"container 2.6pcs/pallet,550--378pcs/680-324pcs/1x20"container

Rough Terrain Truck RP·A series

- Great equipmet to move heavy loads up to 1250kg.
- Ergonomic design of the frame to reduce the operation effort.
- Robust enough for the purpose to work outside such as building yard, garden centers.
- Adjustable fork for special dimension pallet.

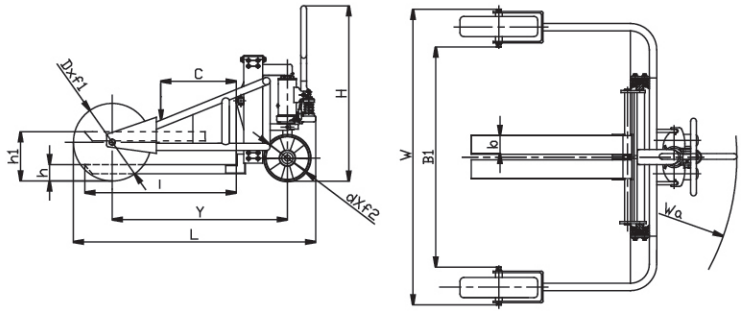

Model		RP1000A	RP1250A
Rated Capacity	(kg)	1000	1250
Max./Min. Fork Height	h1/h (mm)	240/70	
Fork Length	l (mm)	800 (860)	
Load Center	C (mm)	400 (430)	
Adjustable Fork Width	(mm)	216-680	256-680
Individual Fork Width	b (mm)	100	120
Distance Inside The Front Wheel	B1(mm)	1230	
Axle Distance Between Front Wheel And Rear Steering Wheel	Y (mm)	973	
front Load Wheel	Dia.×W (mm)	Ø568×145	
Rear Steering Wheel	Dia.×W (mm)	Ø250	
Turn Radius	Wa (mm)	1500	
Overall Size	L×W×H (mm)	1406×1670×1280	
Net Weight	(kg)	210	238

RP1250A

Mechanic Lifter MR200

- For moving and transporting display pallets, fruit pallet, etc.
- Large wheels of polyurethane ensuring an excellent manoeuvrability.

Galvanized

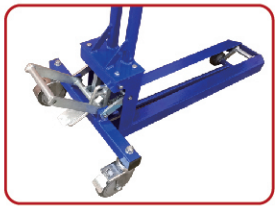

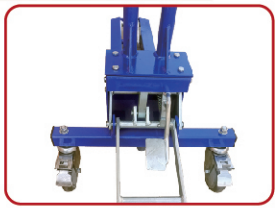

Model		MR200	MR200-A	MR200-B
Capacity	(kg)	200	200	200
Max./Min. Platform Height	(mm)	120/95	120/95	120/95
Fork Size	L×W (mm)	580×210	600×190	750×190
Front Wheel	Dia.×W (mm)	Ø75×32	Ø75×32	Ø75×32
Rear Castor	Dia.×W (mm)	Ø125×32	Ø125×32	Ø125×32
Platform Size	(mm)	215×575	190×600	190×750
Overall Size	(mm)	920×510×1040	940×510×1040	1090×510×1040
Net Weight	(kg)	21	24	26

Mechanica Lifter SR200

Model	SR200
Capacity	200kg
Min./Max.Platform height	90/120mm
Fork Size	600×220mm
Wheel Dia.	75mm
Net Weight	21Kg

Mechanic Lifter MX series

- To replace hydraulic pallet truck when under 300kg load.
  Pallets are simply lifted by pulling the handle backwards, more efficient.
- Extremely low weight, about 25kg, can easily be carried to other floors, put into a truck or a car.
- Foldable, handle design.
- Ideal for grocery stores, all kind of small stores, pharmaceutical industry, drugstores, offices, schools, hospitals etc.

Model		MX0608	MX0610
Capacity	(kg)	300	300
Lift Height	(mm)	145	145
Lowered Height	(mm)	85	85
Fork Width Outside	(mm)	420	420
Fork Length	(mm)	800	1100
Width of Single Fork	(mm)	120	120
Total Height	(mm)	200/1160	200/1160
Steer Wheel	Dia.×W (mm)	Ø80×40	Ø80×40
Load Wheel	Dia.×W (mm)	Ø80×40	Ø80×40
Overall Size	L×W (mm)	1030×420	1330×420
Net Weight	(kg)	25	35

Electric Powered Pallet Truck CBD15/CBD15C

- A fully powered pallet truck which can lift and transfer pallets quickly and easily.
- Convienent fingertip raise and lower buttons.
- Easy-to-operate throttle offers infinite forward and reverse speeds.
- Safety features include a horn,an electromagnetic brake and belly reverse button.
- 24V maintenance free batteries and battery charger.
- Excellent stability and reliability.

CBD15

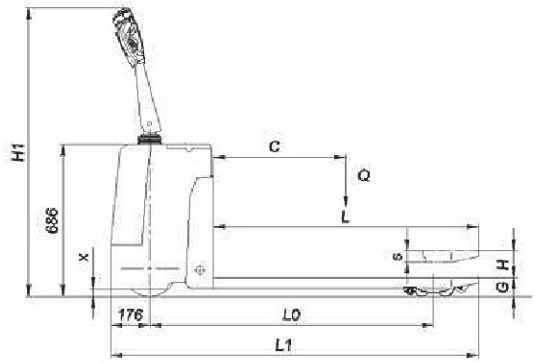

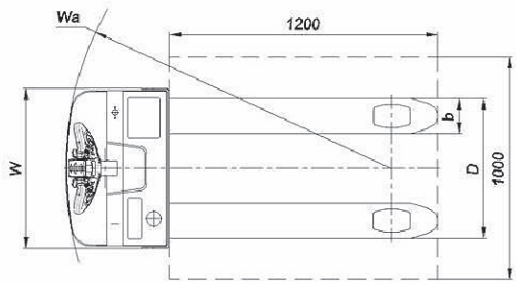

Option

CBD15C

CBD20C

Model		CBD15	CBD15C	CBD20C
Power Type		Battery	Battery	Battery
Driving Style		Walkie	Walkie	Stand on (Walkie)
Load Capscity	Q (Kg)	1500	1500	2000
Load Center	C (mm)	600	600	600
Overall Lenth	L1 (mm)	1700	1730	1730
Overall Width	W (mm)	700	710	710
Overall Height	H1 (mm)	1250	1320	1320
Fork Dimension	L×b×m (mm)	1150×160×55	1150×160×50	1150×160×50
Out Width of Forks	D (mm)	550/600/650/685	540/680	540/680
Base Clearance	x (mm)	30	30	30
Material of Wheel		PU	PU	PU
Size of Driving Wheel	(mm)	Ø252×67	Ø250×80	Ø250×80
Size of Front Wheel	(mm)	Ø70×70	Ø78×70	Ø78×70
Size of Balance Wheel	(mm)	Ø84×70	Ø100×40	Ø100×40
Min Steering Radius	Wa (mm)	1550	1550	1550
Min Stacking Aisle	Ast (mm)	1920	1865	1865
Min Height of Forks	G (mm)	85	85	85
Max Height of Forks	H (mm)	205	205	205
Max. Travel Speed (laden/undan)	(Km/h)	3/3.5	3.5/4.0	4.5/5.0
Gradeability	(%)	5	5	5
Brake Type			Electromagnetic	
Power of Driving Motor	(KW)	0.63	0.7	1.2
Power of Lift Motor	(KW)	DC 0.8	DC 0.8	DC 0.8
Battery Capacity/Voltage	(Ah/V)	70/24	95/24	95/24
Weight of Battery	(Kg)	48	51	105
Net Weight (no battery)	(Kg)	275	255	268

Electric Pallet Truck CBD20E/CBD25E

- Heavy-duty design for hard work and standard product is equipped with EPS.
- Curtis brand stepless speed controller with safety protection functions.
- The vertical driving wheel has higher reliability, strong power and convenient replacement of the wheel.
- Germany MAHLE hydraulic motor, electromagnetic brake.
- Balance wheel load bearing and driving wheel floating structure is applied to greatly improve the stability of traveling and steering.
- An auxiliary cylinder acts on driving wheel through a spring, and traction force is increased along with the increasing of the load.
- Variable force of driving wheel ensures driving force and climbing ability under different load conditions.
- Fork lift is functioned by the structure of rail-roller which greatly improve the strength and the service life of relative parts.
- The intelligent battery charger is simple and easy to operate, and a LED screen displays the charging status and process.
- Driving motor AC and DC optional, EPS can be installed or not installed.

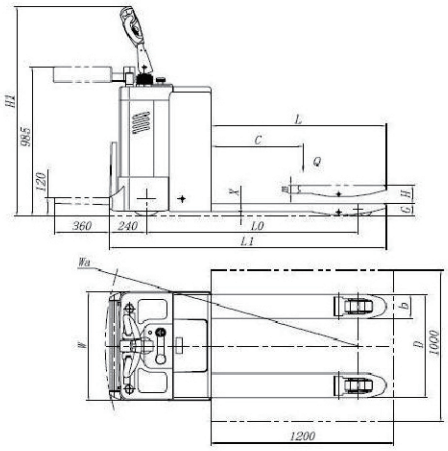

CBD20E

CBD25E

Model		CBD20E	CBD25E
Power Type		battery	
Driving Style		standing pedal	
Load Capacity	Q (kg)	2000	2500
Load Center	C (mm)	600	
Overall Length	L1 (mm)	1820	
Overall Width	W (mm)	720	
Overall Height	H1 (mm)	1380	
Fork Dimension	L×b×m (mm)	1150×160×55	
Outside Width of Forks	D (mm)	540	680
Ground Clearance	x (mm)	30	
Base Distance	L0 (mm)	1400	
Wheel Material		PU	
Driving Wheel Size	(mm)	Ø230×80	
Front Wheel Size	(mm)	Ø80×70	
Balance Wheel Size	(mm)	Ø125×75	
Min. Steering Radius	Wa (mm)	1670	
Channel Width for Turn	(mm)	≥2100	
Min. Fork Height	G (mm)	85	
Max. Fork Stroke	H (mm)	≥120	
Max. Travel Speed	(mm)	5.5	
Gradeability Loaded	(%)	8	
Brake Type		electromagnetic	
Power of Driving Motor	(Kw)	1.5	
Power of Lift Motor	(Kw)	2.0	
Power of Steering Motor	(Kw)	0.165	
Battery Capacity/Voltage	(Ah/V)	210/24	
Weight of Battery	(kg)	180	
Net Weight（no battery）	(kg)	485	

Powered Pallet Truck TE/TK series

DC/AC Technology

- Maneuver loads up ramps and dockboards effortlessly.
- Compact design combines with new technology, making this pallet truck ideal for narrow, cramped aisles. shortest head length in the market permits the best possible maneuverability.
- Smooth stepless speed control with European technology.
- Power unit with European technology.
- Powerfull traction battery.
- Drive unit with electromagnetic brake.
- Conforms to EN1726 and EN1175-1.

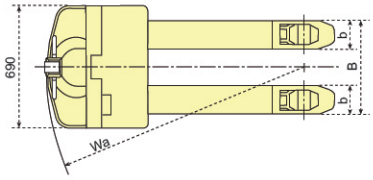

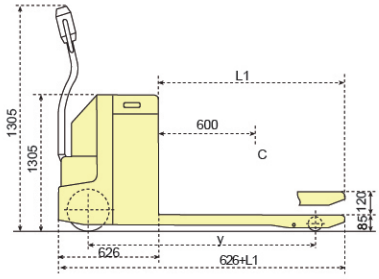

TE20S

Printer is optional.

European Indicator and Load cell, conform to ROSH.
Capacity: 2000kg
Accuracy: 0.1% of the weight on the truck
Graduation: 1.0kg
With SUM, TARE function
With 4 Dry battery. (or rechargeable battery)
IP65 (NEMA 4)
Working temperature:-10℃~40℃

TK20S

Powered Scale Truck
TEW20S/L (Fork Size: 530/680×1150mm)

Model		TE20S	TE20S AC	TE20L	TE20L AC	TK20S	TK20S AC	TK20L	TK20L AC
Type		without platform				with platform			
Capacity	(kg)	2000				2000			
Load Center	C (mm)	600				600			
Max. Fork Height	H (mm)	205				205			
Min. Fork Height	h (mm)	85				85			
Fork Length	L1 (mm)	1150				1150			
Individual Fork Width	b (mm)	160				160			
Wheel Base	y (mm)	1406				1406			
Turning Radius	Wa (mm)	1608				1946			
Traveling Speed With/Without Load	(Km/h)	3.6/5.4				3.6/5.4			
Lifting Speed With/Without Load	(mm/s)	22/32				22/32			
Lowering Speed With/Without Load	(mm/s)	50/55				50/55			
Drive Wheel		1200W, Φ250mm				1200W, Φ250mm			
Power Unit (Lifting Motor)	(W/V)	800/24				800/24			
Traction Battery		24V/210Ah, 185kg				24V/210Ah, 185kg			
Battery Charger		25A/24V				25A/24V			
Overall Dimension	L×W×H (mm)	1781×690×1305				2125×690×1305			
Fork Overall Width	B (mm)	530	530	680	680	530	530	680	680
Net Weight	(kg)	324	324	329	329	338	338	343	343

Powered Pallet Truck GB20

- High running speed-Driving speed is 11Km/h.
- EPS-Mute,energy saving,lighter.
- Intelligent Control -Curve antomatically slow down,more safety.

Model		GB20
Configuration No.		490
Load Capacity	(kg)	2000
Load Center	(mm)	600
Wheel Base	(mm)	1569
Operation Type		Stand On
Driving Wheel Size	(mm)	Ø248×75
Balance Wheel Size	(mm)	Ø84×80 (Double wheels)
Bearing Wheel Size	(mm)	Ø140×60
Fork Height	(mm)	85/205
Overall Fork Width	(mm)	550/685
Fork Length	(mm)	1150/1200
Fork Width	(mm)	165
Fork Thickness	(mm)	75
Overall Length	(mm)	2465
Overall Width	(mm)	790
Overall Height (With handle)	(mm)	1170
Min. Turning Radius	(mm)	2278
Min. Aisle Width for Pallets 800×1200	(mm)	2568
Min. Aisle Width for Pallets 1000×1200	(mm)	2589
Travel Speed, Laden/Unladen	(km/h)	10/11
Lift Speed, Laden/Unladen	(mm/s)	20/25
Lowering Speed, Laden/Unladen	(mm/s)	40/30
Gradeability, Laden/Unladen	(%)	15/10
Drive Motor	(kw)	AC 3
Lift Motor	(kw)	DC 1.2
Steering Motor	(kw)	DC 0.15
Battery Voltage/Capacity	(V/Ah)	24/280
Brake	(B)	Electromagnetic / Regenerative
Battery Weight	(kg)	288
Service Weight with Battery	(kg)	875

Semi-Electric Pallet Truck SE series

- Heavy duty design.
- Drive unit is equipped with electro magnetic brake.
- Smooth travel with excellent controller.

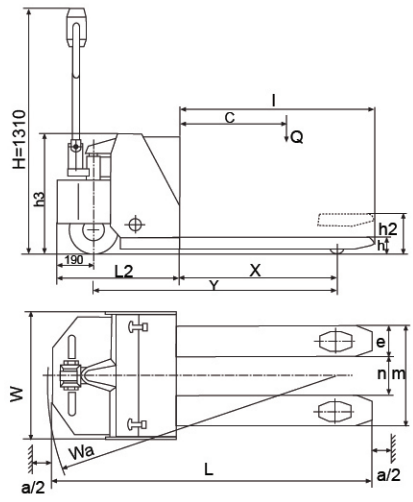

Model		SE20S	SE20L
Capacity	(kg)	2000	2000
Max. Fork Height	h2 (mm)	205 (or 195)	205 (or 195)
Min. Fork Height	h (mm)	85 (or 75)	85 (or 75)
Fork Overall Width	m (mm)	540	680
Travelling Speed (With Load/Without Load)	(km/h)	3.0/4	3.0/4
Overall Height	H (mm)	1465	1465
Overall Width	W (mm)	706	706
Dimension	n (mm)	220	360
	h3 (mm)	643	643
	Wa (mm)	1500	1500
Overall length	L (mm)	1785	1785
Fork Length	l (mm)	1150	1150
Load Centre	C (mm)	600	600
Load distance	X (mm)	945	945
Wheel Base	Y (mm)	1285	1285
Net Weight (without nattery)	(kg)	290	295
Drive Wheel, Ployurethane		Motor 1200W, Wheel Φ250×80mm	
Battery (service free)	(Ah/V)	80/24	
Battery Charger	(A/V)	10/24	
Traction Battery (option)	(Ah/V)	160/24	160/24

Mini Electric Pallet Truck CEY15A

- Capacity:1500kg, DC power,light-duty conditions
- Fit for small work space,double-side pallet can use
- Maintenance-free battery/easy replance/inner charger
- Replace hand pallet truck, load/unload on vehicles
- Low voltage protection, truck will stop if voltage is lower, make truck/battery with long using life
- Emergecy stop/hour meter/Battery level indicator

Model		CEY15A
Load capacity	kg	1500
Load center	mm	600
Wheel base	mm	1301
Operating type		Walkie
Wheels type		PU
Wheel quantity Driving wheel/Balance wheel /Bearing wheel		1/0/4
Driving wheel size	mm	Φ252×67
Balance wheel size	mm	Φ84×70
Bearing wheel size	mm	-
Min.fork lowered height		85
Max.fork lifting height	mm	205
Max.lifting height	mm	120
Outside width between forks	mm	550/685
Inside width between forks		230/365
Fork length	mm	1150/1200
Fork width	mm	160
Fork thickness	mm	55
Overall length	mm	1707
Overall width	mm	697
Overall height(With handle)	mm	1181
Overall height(Without handle)	mm	714
Min.Turning radius	mm	1547
Min.Aisle width for pallets 800×1200	mm	1920
Min.Aisle width for pallets 1000 ×1200	mm	1953
Travel speed,laden/unladen	km/h	3/3.5
Lift speed,laden/unladen	mm/s	56/60
Lowering speed,laden/unladen	mm/s	57/59
Gradeability,laden/unladen	%	5/7
Drive motor	KW	DC 0.63
Lift motor	KW	DC 0.8
Battery voltage / capacity	V/Ah	24/70
Brake		Electromagnetic / Regenerative
Battery weight	kg	48
Service weight with battery	kg	275

Mini Electric Pallet Truck CEY15B

- Capacity:1500kg, DC power,light-duty conditions
- Fit for small work space,double-side pallet can use
- Maintenance-free battery/easy replance/inner charger
- Replace hand pallet truck, load/unload on vehicles
- Low voltage protection, truck will stop if voltage is lower, make truck/battery with long using life
- Emergecy stop/hour meter/Battery level indicator

Model		CEY15B
Load Capacity	kg	1500
Load center	mm	600
Wheel base	mm	1285/1235
Wheels type		PU
Wheel quantity Driving wheel/Balance wheel /Bearing wheel		1/0/4
Driving wheel size		Φ210×70
Balance wheel size	mm	Φ84×70 Double
		Φ80×101 Single
Min.fork lowered height	mm	85
Max.fork lifting height	mm	205
Max.lifting height		120
Outside width between forks	mm	550
Inside width between forks	mm	390
Fork length	mm	1150/1200
Fork width		160
Fork thickness	mm	73
Overall length	mm	1648/1698
Overall width	mm	570
Overall height(With handle)	mm	1213
Overall height(Without handle)	mm	634
Min.Turning radius	mm	1414/1464
Min.Aisle width for pallets 800×1200	mm	1728/1778
Min.Aisle width for pallets 1000×1200	mm	1764/1814
Travel speed,laden/unladen	km/h	3.5/4
Lift speed,laden/unladen	mm/s	20/25
Lowering speed,laden/unladen	mm/s	40/30
Gradeability,laden/unladen	%	5/7
Drive motor	KW	DC0.65
Lift motor	KW	DC0.8
Steering motor	KW	--
Battery voltage / capacity	V/Ah	24V/65Ah
Brake		Electromagnetic
Battery weight	kg	100
Service weight with battery	kg	210

Walkie Electric Pallet Truck CEY18/20W

- Ddouble-side pallet can be used
- AC free maintenance motor, without carbon brush
- Small turning radius, fit for narrow space
- Electric lifting, rapid, efficient, limited switch
- Outerside charger
- Low voltage protection, truck will stop if voltage is lower, make truck/battery with long using life
- Emergecy stop/hour meter/Battery level indicator

Model		CEY18/20W
Load capacity	kg	1800/2000
Load center	mm	600
Wheel base	mm	1300
Operating type		Walkie
Wheels type		PU
Wheel quantity Driving wheel/Balance wheel/Bearing wheel		1/1/4
Driving wheel size	mm	Φ228×75
Balance wheel size	mm	Φ84×80(Double wheels)
Bearing wheel size	mm	Φ115×55
Min.fork lowered height		85
Max.fork lifting height	mm	195
Max.lifting height	mm	100
Overall fork width	mm	550/600/650/685
Fork length		1150/1200
Fork width	mm	170
Overall length	mm	1650
Overall width	mm	725
Overall height(With handle)	mm	1380
Overall height(Without handle)	mm	890
Min.Turning radius	mm	1450
Min.Aisle width for pallets 800×1200	mm	1866
Min.Aisle width for pallets 1000×1200	mm	1921
Travel speed,laden/unladen	km/h	3.5/4.0
Lift speed,laden/unladen	mm/s	20/25
Lowering speed,laden/unladen	mm/s	40/30
Gradeability,laden/unladen	%	5/7
Drive motor	KW	AC 0.95
Lift motor	KW	DC1.2
Steering motor	KW	/
Battery voltage/capacity	V/Ah	24/210
Brake		Electromagnetic/Regenerative
Controller		CURTIS
Battery weight	kg	202
Service weight with battery	kg	552

Mini Electric Pallet Truck CEY15B

- Capacity:1500kg, DC power,light-duty conditions
- Fit for small work space,double-side pallet can use
- Maintenance-free battery/easy replance/inner charger
- Replace hand pallet truck, load/unload on vehicles
- Low voltage protection, truck will stop if voltage is lower, make truck/battery with long using life
- Emergecy stop/hour meter/Battery level indicator

Model		CEY20WE
Load Capacity	kg	2000
Load center	mm	600
Wheel base	mm	1390
Operating type		Walkie
Wheels type		PU
Wheel quantity Driving wheel/Balance wheel /Bearing wheel		1/1/4
Driving wheel size	mm	Φ248×75
Balance wheel size		Φ80×80
Bearing wheel size	mm	Φ115×55
Min.fork lowered height	mm	85
Max.fork lifting height		195
Max.lifting height	mm	110
Overall fork width	mm	540/600/685
Fork length	mm	1150/1200
Fork width		185
Fork thickness	mm	55
Overall length	mm	1750
Overall width	mm	720
Overall height(With handle)	mm	1385
Overall height(Without handle)	mm	850
Min.Turning radius	mm	1575
Min.Aisle width for pallets 800×1200	mm	1900
Min.Aisle width for pallets 1000×1200	mm	1940
Travel speed,laden/unladen	km/h	4/4
Lift speed,laden/unladen	mm/s	56/60
Lowering speed,laden/unladen	mm/s	57/59
Gradeability,laden/unladen	%	5/7
Drive motor	KW	AC 1.5
Lift motor	KW	DC 2.0
Steering motor	KW	DC 0.15
Battery voltage / capacity	V/Ah	24/210
Brake		Electromagnetic/Regenerative
Controller		CURTIS 1230
Battery weight	kg	190
Service weight with battery	kg	600

Rider Electric Pallet Truck CEY20

- Mechanical Steering-Economic,comfortable,more reliable.
- Capacity:2000kg, double-side pallet can be used
- AC free maintenance motor, without carbon brush
- Small turning radius, fit for narrow space
- Electric lifting, rapid, efficient, limited switch
- Outerside charger, 24V/210AH battery
- Low voltage protection, truck will stop if voltage is lower, make truck/battery with long using life
- Emergecy stop/hour meter/Battery level indicator

Model		CEY20
Load capacity	kg	2000
Load center	mm	600
Wheel base	mm	1407
Operating type		Walkie/Stand On
Wheels type		PU
Wheel quantity		1/1/4
Driving wheel size	mm	Φ248×75
Balance wheel size	mm	Φ84×80(Double wheels)
Bearing wheel size	mm	Φ140×60
Min.fork lowered height	mm	85
Max.fork lifting height	mm	210
Max.lifting height	mm	125
Overall fork width	mm	550/600/685
Fork length	mm	1150/1200
Fork width	mm	165
Fork thickness	mm	55
Overall length	mm	1874/2247
Overall width	mm	725
Overall height(With handle)	mm	1475
Overall height(Without handle)	mm	940
Min.Turning radius	mm	1680/2060
Min.Aisle width for pallets 800×1200	mm	2000/2320
Min.Aisle width for pallets 1000×1200	mm	2030/2340
Travel speed,laden/unladen	km/h	6/6
Lift speed,laden/unladen	mm/s	20/25
Lowering speed,laden/unladen	mm/s	40/30
Gradeability,laden/unladen	%	5/7
Drive motor	KW	AC 1.5
Lift motor	KW	DC 1.2
Steering motor	KW	-
Battery voltage / capacity	V/Ah	24/210
Brake		Electromagnetic/Regenerative
Controller		CURTIS 1230
Battery weight	kg	190
Service weight with battery	kg	710

Rider Electric Pallet Truck CEY20RE/25RE/30RE with EPS system

- Capacity: 2000/2500/3000kg, with AC control systm and EPS System (Electric Powe Steering)
- Stable quality make sure for long-distance operation
- Large battery capacity 24V/280Ah is operation, fit for long time use and heavy-duty loading
- Foldable & Anti-skip platform and protection arms make operation convenient, safe and efficient
- With Hourmeter and BDI(Battery Discharge Indicator) inform the operation battery and working status
- Durable and rigid construction ensure the trucks to handle heavy loads
- Sidey battery exchange

Model		CEY20RE/25RE/30RE
Load capacity	kg	2000/2500/3000
Load center	mm	600
Wheel base	mm	1493
Operating type		Stand On
Wheels type		PU
Wheel quantity		1/2/4
Driving wheel size	mm	Φ248×75
Balance wheel size		Φ84×80(Double wheels)
Bearing wheel size	mm	Φ115×55
Min.fork lowered height	mm	85
Max.fork lifting height		205
Max.lifting height	mm	120
Overall fork width	mm	550/600/650/685
Fork length	mm	1150/1200
Fork width		170
Fork thickness	mm	75
Overall length	mm	1916/2333
Overall width	mm	790
Overall height(With handle)	mm	1455
Overall height(Without handle)	mm	845
Min.Turning radius	mm	1746/2158
Min.Aisle width for pallets 800×1200	mm	2046/2435
Min.Aisle width for pallets 1000×1200	mm	2077/2458
Travel speed,laden/unladen	km/h	5/5
Lift speed,laden/unladen	mm/s	20/25
Lowering speed,laden/unladen	mm/s	40/30
Gradeability,laden/unladen	%	5/7
Drive motor	KW	AC 1.5
Lift motor	KW	DC 1.2
Steering motor	KW	DC 0.15
Battery voltage / capacity	V/Ah	24/270
Controller		Electromagnetic / Regenerative
Weight		CURTIS
Battery weight	kg	245
Service weight with battery	kg	830

Heavy Duty Electric Pallet Truck CLY35A/CLY35B/CLY35C with EPS system

- Electronic power steering system,light and low noise
- Drive unit floating bodies with patent design.
- AC driving system,No carbon brush,maintenance free.
- Electromagnetic,regenerative braking system
- Automatic lifting limit,Motor and battery life extension.
- Load backrest is STD
- Side-way battery is STD

Model		CLY35A	CLY35B	CLY35C
Load capacity	kg	3500	3500	3500
Apply to pallet	mm	Double Pallet	Single Pallet	Single Pallet
Wheel base	mm	2084	1602	1602
Operating type		Rider	Rider	Walkie
Wheels type		PU	PU	PU
Wheel quantity		1/4/2	1/4/2	1/4/2
Driving wheel size	mm	Φ228×93	Φ228×93	Φ228×93
Balance wheel size	mm	Φ84×152	Φ84×152	Φ84×152
Bearing wheel size	mm	Φ115×55	Φ115×55	Φ115×55
Min.fork lowered height	mm	85	85	85
Max.fork lifting height	mm	230	230	230
Max.lifting height	mm	145	145	145
Overall fork width	mm	680	680	680
Fork length	mm	2432	1212/1365/1517	1212/1365/1517
Fork width	mm	250	230	230
Fork thickness	mm	60	60	60
Overall length	mm	3605	2374	2222
Overall width	mm	930	930	832
Overall height(With handle)	mm	1536	1536	1536
Overall height(Without handle)	mm	1280	1280	1280
Min.Turning radius	mm	2708	2190	2051
Min.Aisle width for pallets 1200×1200	mm	3650	2536	2365
Travel speed,laden/unladen	km/h	11/14	11/14	4/4.5
Lift speed,laden/unladen	mm/s	30/35	30/35	30/35
Travel speed,laden/unladen	mm/s	45/40	45/40	45/40
Gradeability,laden/unladen	%	5/12	5/12	5/10
Drive motor	KW	AC 4.2	AC 4.2	AC 3.0
Lift motor	KW	DC 2	DC 2	DC 2
Steering motor	KW	DC0.15	DC0.15	DC0.15
Battery voltage / capacity	V/Ah	24/360	24/360	24/360
Brake		Electromagnetic/Regenerative	Electromagnetic/Regenerative	Electromagnetic/Regenerative
Controller		CURTIS 1230	CURTIS	CURTIS
Battery weight	kg	400	400	400
Service weight with battery	kg	1120	1045	910

High Speed Rider Pallet Truck HSY20 with EPS system

- Corning Speed, automatic reduces the driving speed when turning in corner.
- Better Protection for operators. The driver stands inside the steer structure, lower risk of hurt.
- Floating Driving system ensure the comfortable operating feeling.
- Easy replace load-wheel
- AC Curtis transistor controller
- Big capacity of battery for lone time labour
- High performance AC driving Motor,
- Liftstar EPS controller, you can move the handle by one figer
- Slideway battery design

Model		HSY20
Load capacity	kg	2000
Load center	mm	600
Wheel base	mm	1569
Operating type		Walkie / Stand On
Wheels type		PU
Wheel quantity Driving wheel/Balance wheel /Bearing wheel		1/2/4
Driving wheel size	mm	Φ248×75
Balance wheel size		Φ84×80
Bearing wheel size	mm	Φ140×60
Min.fork lowered height	mm	85
Max.fork lifting height		205
Max.lifting height	mm	120
Overall fork width	mm	550/600/685
Fork length	mm	1150/1200
Fork width		165
Fork thickness	mm	75
Overall length	mm	2465
Overall width	mm	790
Overall height(With handle)	mm	1170
Overall height(Without handle)	mm	-
Min.Turning radius	mm	2278
Min.Aisle width for pallets 800×1200	mm	2568
Min.Aisle width for pallets 1000×1200	mm	2589
Travel speed,laden/unladen	km/h	10/10
Lift speed,laden/unladen	mm/s	20/25
Lowering speed,laden/unladen	mm/s	40/30
Gradeability,laden/unladen	%	15/10
Drive motor	KW	AC 3
Lift motor	KW	DC 1.2
Steering motor	KW	DC 0.15
Battery voltage / capacity	V/Ah	24/320
Brake		Electromagnetic / Regenerative
Controller		CURTIS 1234
Battery weight	kg	288
Service weight with battery	kg	968

Walkie Electric Pallet Truck with Lithiumion battery **CEY15L**

- Small size,light weight,easy to operate;
- Lithium-ion battery power;
- Permanent magnet brushless drive and hoist motor,maintenance-free,high efficiency,longer life;
- Standard lifting limit switch;
- Open layout,ultra-fast replacement of driving wheels, easy maintenance.

Model		CEY15L
Load capacity	kg	1500
Load center	mm	600
Wheel base	mm	1166
Operating type		Walkie
Wheels type		PU
Driving wheel size	mm	Φ145×54
Bearing wheel size	mm	Φ80×30
Balance wheel size	mm	Φ80×70
Wheel quantity Driving wheel/Balance wheel /Bearing wheel	mm	1/2/4
Min.fork lowered height	mm	85
Max.fork lifting height	mm	205
Max.lifting height	mm	120
Outside width between forks		560//685
Inside width between forks	mm	240/365
Fork length	mm	900/1150/1200
Fork width	mm	160
Fork thickness	mm	73
Overall length	mm	1450
Overall width	mm	560
Overall height(With handle)	mm	1160
Overall height(Without handle)	mm	700
Min.Turning radius	mm	1450
Min.Aisle width for pallets 800×1200	mm	1800
Min.Aisle width for pallets 1000×1200	mm	1830
Travel speed,laden/unladen	km/h	4.5/5.0
Lift speed,laden/unladen	mm/s	25/40
Lowering speed,laden/unladen	mm/s	80/55
Gradeability,laden/unladen	%	5/7
Drive motor /Lift motor	KW	AC0.60/AC0.80
Lithium-ion battery voltage	V	72
Lithium-ion battery capacity	Ah	8
Brake		Electromagnetic / Regenerative
Battery weight	kg	5.2
Service weight with battery	kg	118

High Lift Scissor Truck HL/HS series

- Manual
  Capacity 1000kg (2200lbs).
  Larger piston offer real 1000kg full capacity.
- Conforms to EN 1757-4.

- Electric
  Capacity 1000kg (2200lbs).
  High quality hydraulic motor made in Italy.
- Conforms to EN 1757-4 and EN 1175.

- All parts are made of stainless 316 including hydraulic pump, fork frame, handle, push rod, bearing, pin and bolt, etc.. (HS)

HS (Stainless)

HL-540M

HL-540E

Model		HL540M	HL680M	HL540E	HL680E	HS540M	HS680M	HS540E	HS680E
Type		Manual		Electric		Manual		Electric	
Capacity	(kg)	1000	1000	1000	1000	1000	1000	1000	1000
Max. Fork Height	(mm)	800	800	800	800	800	800	800	800
Fork Overall Width	(mm)	540	680	540	680	540	680	540	680
Fork Length	(mm)	1165	1165	1165	1165	1165	1165	1165	1165
Battery	(Ah/V)	—	—	54/12	54/12	—	—	54/12	54/12
Battery Charger	(A/V)	—	—	8/12	8/12	—	—	8/12	8/12
Net Weight (without battery)	(kg)	110	125	150	165	116	125	144	149

Rollers: Nylon, Polyurethane. Wheels: Nylon, Polyurethane, Rubber.
Materials and specification are subject to change without notice.

High Lift Scissor Truck HB series

The best selling in the world !

- Single stage cylinder: No decrease of capacity. No risk of leakage. No dangerous dropping of second stage cylinder.
- Ergonomic design handle.
- Improved safety: Automatic activation of self-adjusting stabilizers when lifting loads higher than 400mm for maximum stability and optimum braking.
- Excellent manoeuvrability due to compact design the compact structure with the battery and power unit positioned between body and lifting cylinder resulting in a low centre of gravity and .
- Flexibility: Can work manually when the battery has been charged.
- Conforms to EN1757-4 and EN1175.
  Manual
- Quick-lift function doubles the lifting speed when lifting loads less than 250kg.
  Electric
- Charger: 10A/12V separated, or 6A/12V Built-in.
- European Technology power unit.

HB1056M

HB1056EN

Built-in charger

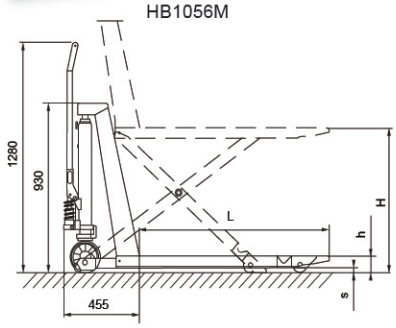

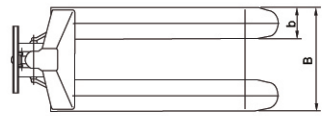

Model		HB1056M	HB1068M	HB1056E	HB1068E	HB1056EN	HB1068EN
Type		Manual		Electric		Electric (built in charger)	
Capacity	(kg)	1000	1000	1000	1000	1000	1000
Max. /Min. Fork Height	H/h (mm)	800/85 ± 2	800/85 ± 2	800/85 ± 2	800/85 ± 2	800/85 ± 2	800/85 ± 2
Fork Size	BxL (mm)	560×1190	680×1190	560×1190	680×1190	560×1190	680×1190
Front Load Roller	(mm)	Ø75×75	Ø75×75	Ø75×75	Ø75×75	Ø75×75	Ø75×75
Steering Wheel	(mm)	Ø180×50	Ø180×50	Ø180×50	Ø180×50	Ø180×50	Ø180×50
Lifting Time, without / with Rated Load	(sec)	—	—	11/19	11/19	11/19	11/19
Battery	(Ah/V)	—	—	70/12	70/12	70/12	70/12
Battery Charger		—	—	Separate 10A/12V		Built-in 6A/12V	
Net Weight (without Battery)	(kg)	128	133	158	163	159	164

High Lift Scissor Truck HLT/DGB series

DGB

HLT

Model		HLT1-540	HLT1-680	DGB1-540	DGB1-680
Type		Manual	Manual	Electric	Electric
Capacity	(kg)	1000	1000	1000	1000
Min.Fork Height	(mm)	85	85	85	800
Max.Fork Height	(mm)	800	800	800	800
Fork Size	(mm)	540x1170	680x1170	540x1170	680x1170
Front Load Roller	(mm)	Ø75x50	Ø75x50	Ø75x50	Ø75x50
Steering Wheel	(mm)	Ø180x50	Ø180x50	Ø180x50	Ø180x50
Lifting Time,without/with Rated Load	(sec)	—	—	15/25	15/25
Battery	(Ah/V)	—	—	50/12	50/12
Battery Charger		—	—	Built-in 8A/12V	Built-in 8A/12V
Net Weight	(kg)	109	112	134	137

High Lift Scissor Truck HPT series

HPT-M

HPT-E

Model		HPT5410M	HPT6810M	HPT5415M	HPT6815M	HPT5410E	HPT6810E	HPT5415E	HPT6815E
Type		Manual				Electric			
Capacity	(kg)	1000	1000	1500	1500	1000	1000	1500	1500
Fork	L×W (mm)	1150×160				1150×160			
Fork Overall Width	(mm)	540	680	540	680	540	680	540	680
Min. Height	(mm)	85 (75)				85 (75)			
Max. Height	(mm)	800				800			
Battery	(Ah/V)	—				75/12			
Charger	(A/V)	—				10/12			
Weight	(kg)	118	125	128	135	155	160	160	165

High Lift Scissor Truck HPTL series

HPTL-M

HPTL-E

Automatically Scissor Truck

Automatically Scissor Truck HPTL-S

- Two infrared sensors.
- Fork height automatically adjusted.
- Machine raised while switch turn on, as both infrared sensors detect stopper, Fork lowering automatically.
- Either of infrared sensors detect stopper, Fork stopped automatically.

Model		HPTL5410M	HPTL6810M	HPTL5410E	HPTL6810E
Type		Manual	Manual	Electric	Electric
Capacity	(kg)	1000	1000	1000	1000
Fork Length	(mm)	1500/1800/2000	1500/1800/2000	1500/1800/2000	1500/1800/2000
Fork Overall Width	(mm)	540	680	540	680
Min.Height	(mm)	90	90	90	90
Max.Height	(mm)	800	800	800	800
Battery	(Ah/V)	—	—	75/12	75/12
Charger	(A/V)	—	—	10/12	10/12

High Lift Scissor Truck JL/JE series

- Manual
- Extremely easy to pump and light make this unit very suitable as combined hand pallet truck and lift table.
- Front support legs and adjustable stabilizers extended to the floor automatically when the forks reach a height of 420mm, to ensure maximum stability and optimum braking.
- Ergonomic warm handle offers you simple and comfortable operation.
- Heavy duty design: 4mm steel plate fork frame and larger lift piston ensure the truck to reach rated capacity.
- Conforms to EN1757-4 and EN1175.

Ergonomic handle

Front support legs

- Electric
- Quick-lift as standard with automatic transfer to normal lifting with loads over 150kg.
- Automatic descendng speed control by a uniquely hydraulic valve,the decending speed always keeps same regardless the truck with or without load. It will prevent cargo damage from fast descending.

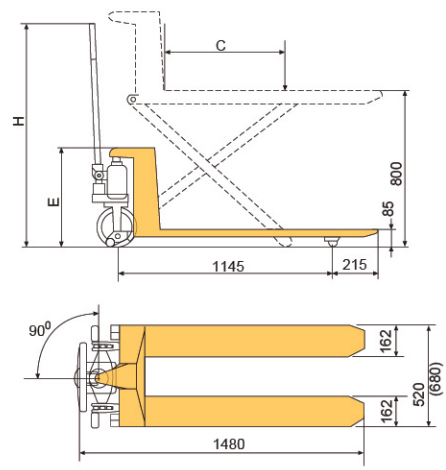

High Qulity Pump!

JE5210

JL5210

Model			JL5210	JL6810	JL5215	JL6815	JE5210	JE6810	JE5215	JE6815
Capacity		(kg)	1000	1000	1500	1500	1000	1000	1500	1500
Max. Fork Height		(mm)	800	800	800	800	800	800	800	800
Min. Fork Height		(mm)	85	85	85	85	85	85	85	85
Fork Overall Width		(mm)	520	680	520	680	520	680	520	680
Fork Length		(mm)	1140	1140	1100	1100	1140	1140	1100	1100
Dimension	C	(mm)	600	600	560	560	600	600	600	600
	E	(mm)	530	530	530	530	530	530	530	530
	H	(mm)	1250	1250	1250	1250	1250	1250	1250	1250
Battery		(Ah/V)	—	—	—	—	70/12	70/12	70/12	70/12
Battery Charger		(A/V)	—	—	—	—	10/12	10/12	10/12	10/12
Net Weight		(kg)	105	112	118	125	140	147	149	157

Skid Lifter SL/PL/PE/PEL series

Easier handling to minimize back strain.
Better feature - it can move when raised.

- Combination of pallet truck and lift table.
- Ideal for your loading and unloading operations.
- Continuous-welded heavy steel frame and forks handle weighty loads with ease.
- Easy-to-use control lever, plus two parking brakes on steering wheels increase safety.
- Reliable power unit for easier and faster lifting.
- Addtional steering handle on 1000kg models for easier and comfortable turning.
- Conforms to EN 1757-4 and EN 1175 (For Electric).

SL100S

PL100S

PE

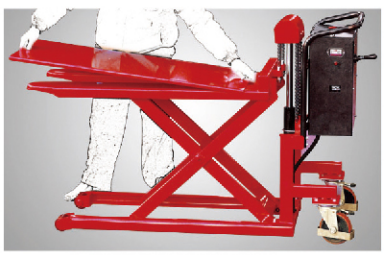

PEL series with platform

Model		SL50S	SL50L	SL100S	SL100L	PL50S	PL50L	PL100S	PL100L	PE50S	PE50L	PE100S	PE100L	PEL50S	PEL50L	PEL100S	PEL100L
Type		Manual								Electric							
Platform		—				With platform				—				With platform			
Capacity	(kg)	500	500	1000	1000	500	500	1000	1000	500	500	1000	1000	500	500	1000	1000
Load Centre	(mm)	560	560	560	560	560	560	560	560	560	560	560	560	560	560	560	560
Max. Fork Height	(mm)	830	830	830	830	833	833	833	833	830	830	830	830	833	833	833	833
Min. Fork Height	h (mm)	85	85	85	85	88	88	88	88	85	85	85	85	88	88	88	88
Fork/Platform Length	L (mm)	1115	1115	1115	1115	1115	1115	1115	1115	1115	1115	1115	1115	1115	1115	1115	1115
Fork/Platform Width	W (mm)	526	690	526	690	538	703	538	703	526	690	526	690	538	703	538	703
Overall Length	W1 (mm)	526	691	687	852	538	703	693	858	580	740	550	720	586	752	556	726
Overall Width	L1 (mm)	1550	1550	1640	1640	1550	1550	1640	1640	1620	1620	1740	1740	1620	1620	1740	1740
Overall Height	H1 (mm)	1012	1012	1307	1307	1012	1012	1307	1307	1050	1050	1307	1307	1050	1050	1307	1307
Steering Wheel	(mm)	Φ70×68 Polyurethane								Φ70×68 Polyurethane							
Front Roller	(mm)	Φ150×40 Polyurethane								Φ150×40 Polyurethane							
Pump Strokes to Max. Lift		45	45	75	75	45	45	75	75								
Power Unit	(KW)	—								1.6							
Battery	(V)	—								12							
Working Cycles	(s)	—								100	100	80	80	100	100	80	80
Net Weight	(kg)	107	116	135	138	122	136	150	158	172	176	174	180	180	184	182	188

Mobile Weighing Cart ZF/ZFP/ZFS/ZFSP series

- Small and compact electronics specially developed for mobile weighing.
  Highest level of water and humidity resistance.
  Smaller housing is more robust and withstands impacts and vibration better.
  One electornic board without connectors means reliability for many years in the hardest applications.
- More reliability for the hardest applications and environments.
- Lower power consumption.
- 4 penlight batteries can be changed without any effort.
- Auto shut off prevents the batteries to be discharged when client forgets to turn the indicator off.
- Summation of weights with sequence number allows verification if the total load has been weighed.
- Kg & lbs can be conversed.

Specification

▲ Capacity 2000kg.
▲ Accuracy 0.1% of the weight applied to the scale.
▲ Graduation 1kg.
▲ High contyast display with wegment height of 18 mm.
▲ Summation and sequence number giving the number of weights totalised.
▲ Auto tare giving the net weight added to or taken from the scale.
▲ Touch panel with push buttons with metal dome, tactile feel gives optimal users interface.
▲ Totally sealed design to the norm IP 65 (NEMA 4).
▲ Operating temperature is -10° to +40°C.
▲ According to ROSH directive and conforms to EN1752-2.

Printer type : Thermal
Functions : Manual paper feed
Paper : Thermal roll, diameter 40mm
Print speed : 13 lines per second

ZF Indicator

Italian Scale System as option

ZFP
with printer

ZFS
Stainless Steel
without printer

Model		ZF20S	ZFS20S	ZF20L	ZFS20L	ZFP20S	ZFSP20S	ZFP20L	ZFSP20L
Capacity	(kg)	2000	2000	2000	2000	2000	2000	2000	2000
Printer		without	without	without	without	with	with	with	with
Max. Fork Height	(mm)	205(195)	205 (195)	205(195)	205 (195)	205(195)	205 (195)	205(195)	205 (195)
Min. Fork Height	(mm)	85 (75)	85 (75)	85 (75)	85 (75)	85 (75)	85 (75)	85 (75)	85 (75)
Fork Length	(mm)	1150	1150	1150	1150	1150	1150	1150	1150
Width Overall Forks	(mm)	555	555	690	690	555	555	690	690
Fork Width	(mm)	180	180	180	180	180	180	180	180
Net Weight	(kg)	117	129	120	132	118	130	121	133

3" (75mm) lowered fork height available.

Scale Pallet Truck HPW series

- Type A Equipped with a top quality sensor and scale meter from Mettler-Toledo, USA. Features weighing accuracy ±1kg in 2000kg.
- Type B Equipped with a high quality Japanese sensor and Mettler-Toledo, USA. Features weighing accuracy ±2kg in 2000kg.
- Rollers/Wheels: Nylon, Polyurethane, Rubber.
- Heavy duty design.

Toledo Indicator

HPW

Model		HPW20S(BSW20S)	HPW20L(BSW20L)	HPW25S	HPW25L	HPW30
Capacity	(kg)	2000	2000	2500	2500	3000
Max. Fork Height	(mm)	205 (195)	205 (195)	205	205	205
Min. Fork Height	(mm)	85 (75)	85 (75)	85	85	85
Fork Length	(mm)	1150	1150	1150	1150	1150
Width Overall Forks	(mm)	555	690	555	690	600
Fork Width	(mm)	180	180	180	180	200
Net Weight	(kg)	131	134	137	140	165

Mobile Weighing Cart YZF series

- High accuracy with fixed load cell.
- Long term reliability from a single circuit board with any extra connectors.
- Lower energy consumption, auto shut off.
- Summation of weights with sequence number. Auto tare.
- Features weighing accuracy ±2kg in 2000kg. 1kg graduation.
- Small and compact electronics specially developed for mobile weighing.
- Robust housing protects against impact and vibration.

Model		YZF20S	YZF20L
Capacity	(kg)	2000	
Max. Fork Height	(mm)	205 or 195	
Min. Fork Height	(mm)	85 or 75	
Fork Length	(mm)	1150	
Fork overall Width	(mm)	555	690
Fork Width	(mm)	180	
Net Weight	(kg)	117	120

High Lift Scissor Truck with Scale JLS/JES series

Manual

- Extremely easy to pump and light make this unit very suitable as combined hand pallet truck and lift table.
- Front support legs and adjustable stabilizers extended to the floor automatically when the forks reach a height of 420mm, to ensure maximum stability and optimum braking.
- Ergonomic warm handle offers you simple and comfortable operation.
- Heavy duty design: 4mm steel plate fork frame and larger lift piston ensure the truck to reach rated capacity.
- Conforms to EN1757-4 and ENl175.

Electric

- Quick-lift as standard with automatic transfer to normal lifting with loads over 150kg.
- Automatic descendng speed control by a uniquely hydraulic valve, the decending speed always keeps same regardless tl truck with or without load. It will prevent cargo damage from fast descending.

Ergonomic handle

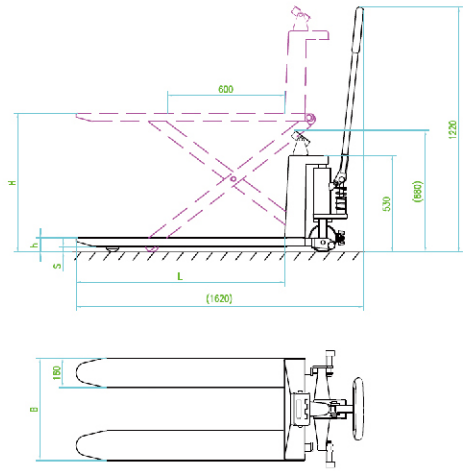

Model		JL6801S	JL5210S	JE6810S	JE5210S
Type		Manual		Electric	
Capacity	(kg)	1000	1000	1000	1000
Max. Fork Height	H(mm)	800	800	800	800
Min. Fork Height	h(mm)	85±2	85±2	85±2	85±2
Fork Width	B(mm)	680	520	680	520
Fork Length	L(mm)	1190	1190	1190	1190
Ground Clearance	S(mm)	19.5	19.5	19.5	19.5
Front Load Roller	(mm)	75×50	75×50	75×50	75×50
Steering Wheel	(mm)	150×40	150×40	150×40	150×40
Pump Strokes to Max. Height Without/with Rated Load		20/60	20/60	--	--
LiftingTime,w ithout/with Rated Load	(sec)	--	--	10/17	10/17
Lifting Times with full power	(sec)	--	--	100	100
Battery	(Ah/V)	--	--	54/12	54/12
Battery Charger		--	--	12V/9A	12V/9A
Weighing Units		Kg/lb			
Division		0.1kg			
Stabilization time		3 sec			
Power Supply		External AC adapter, 9V 800mA, built-in rechargeable			
Display		battery (lead acid,6V/2.gAh)			
Accuracity		6-digit 0.56-inch 7-segment LED			
Operating Temperature		±5kg			
Net Weight(without Battery)	(kg)	0~40°C / 32~104°F			

Weighing System On Forkholder Plate LTW series

- Bearing structure in extra thick sheet steel and accurate functioning mechanics with 2 shear-beam IP68 load cells.
- Stainless steel load cells,full scale output 2 Mv/v,maximum power supply 15Vdc.
- Hermetically sealed junction box.
- Accuracy:+/-5% of the capacity.
- Max. horizontal inclination(flexibility):+/-2° with the same accuracy characteristics.
- Max. allowable overload:more than 300% f.s.,with protection limit swithc in case of broken hinges.
- Max. barycentric shifting:55mm.
- Built-in protection system against overloads and accidental impacts.
- Wide range of connectable indicator and wireless solutions.

Model		LTW15A	LTW25A
Max. Capacity	(kg)	600/1500	1500/2500
Display Accuracy	(kg)	0.2/0.5	0.5/1
Approved Division	(kg)	1/2	2/5

Low Profile Floor Scale NA series

- Rugged steel diamond plate surface with heavy duty welded channel support.
- Overload protection to 150% of capacity, adjustable leveling feet, can be pit mounted or free standing.
- Four alloy tool steel potted load cells.
- Durable power coat finish, 6 digit 7 segment display, bi-directional RS232 port, and operator controls for Zero, Tare, Unit, net/gross and print. Converts to lb. or kg. readout.
- Deluxe stainless steel indicator as standard.
- Two slopes are optional equipments.
- Slopes LE36, LE48, LE60.

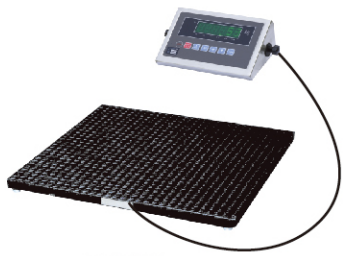

NA2000A
Standard NA includes
a stainless steel indicator.

Slope as option
LE36

Model		LE36	LE48	LE60
Length	(mm)	915 (36inch)	915 (36inch)	915 (36inch)
Width	(mm)	915 (36inch)	1220 (48inch)	1500 (59inch)
Angle	(°)	4.45	4.45	4.45
Net Weight	(kg)	48 (106lbs)	63 (139lbs)	77 (170lbs)

Model		NA1000	NA2000A	NA2000B	NA5000A	NA5000B
Measuring Range	(kg)	1000	2000	2000	5000	5000
Indexing Accuracy	(kg)	0.2	0.5	0.5	1	1
Sensor Capacity	(kg)	1000	2000	2000	2500	2500
Sensor Number		4	4	4	4	4
Platform Size	(mm)	915x915	1220X1220	1500X1500	1220X1220	1500X1500
Height	(mm)	70	70	70	70	70
Net Weight	(kg)	75	145	230	160	312
Equipment Temperature		-10℃~+40℃ relative temperature<95%				
Sensor Temperature		-20℃~+60℃				
Voltage		110V AC (-10%, +10%) 50 Hz				
Accuracy Class		3				

Mobile Floor Scale NC series

- Design like NA series floor scale, but can move with four castors.
- Four alloy tool steel potted load cells.
- Deluxe stainless steel indicator as standard.
- Two slopes are fixed to the platform as standard.
- Supplied flat-pack for easy assembly.

Model		NC1000A	NC1000B	NC1000C	NC1500A	NC1500B	NC1500
Measuring Range	(kg)	1000	1000	1000	1500	1500	1500
Indexing Accuracy	(kg)	0.5	0.5	0.5	0.5	0.5	0.5
Sensor Capacity	(kg)	1000	1000	1000	2000	2000	2000
Sensor Number		4	4	4	4	4	4
Platform Size	(mm)	1000×1000	1000×1200	1500×1500	1000×1000	1000×1200	1500×1500
Overall Size With Slopes	(mm)	2000×1300	2000×1500	2500×1800	2000×1300	2000×1500	2500×1800
Height	(mm)	60	60	60	60	60	60
Net Weight	(kg)	180	200	280	180	200	280

"U" Table Scale ND series

- "U" shaped top platform.
- "U" shaped table scale are special for handling pallets, no need for a pit or load ramps.
- Suitable for weighing in warehouse, storehouse.
- Light net weight, easy to move for one person, with two wheels.
- Four alloy tool steel potted load cells.
- Deluxe stainless steel indicator as standard.

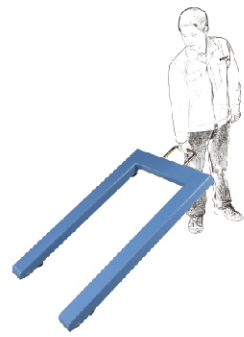

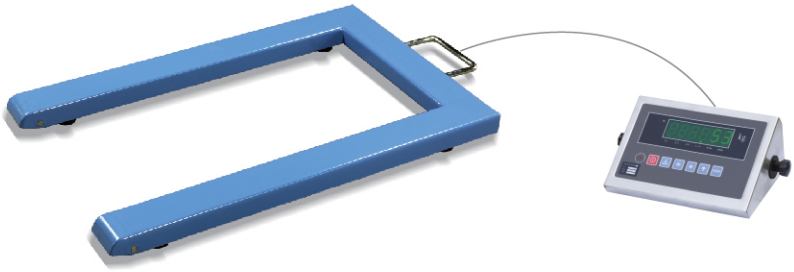

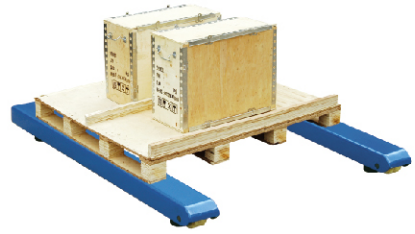

Model		ND500	ND1000	ND2000	ND3000	ND5000
Measuring Range	(kg)	500	1000	2000	3000	5000
Indexing Accuracy	(kg)	0.5	1	2	3	5
Sensor Capacity	(kg)	500	1000	2000	2000	2500
Sensor Number		4	4	4	4	4
Resolution Step	(kg)	4	10	20	20	40
Height	(mm)	120	120	120	120	120
Net Weight	(kg)	38	38	38	38	45

Digital Load Indicators ID series

- The load indictor is a mechanical measuring instrument with electronic display.
- Whether used as a conventional crane scale or to measure forces, it is the economical choice for various applications. It can be used in conjunction with shackles and hooks.
- The load indictor is provided with liquid crystal display (LCD) which can tare as well as show either the gross or the net load.
- It also indicates the overload protection at 110% of the gross weight and the status of the battery.
- Conforms to CE safety standard.

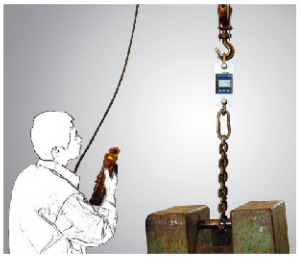

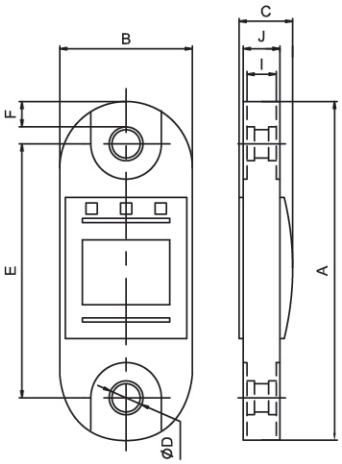

Model		ID250	ID500	ID1000	ID2000	ID3200	ID6400
Max Capacity	lbs. (kg)	550 (250)	1100 (500)	2200 (1000)	4400 (2000)	7000 (3200)	14000 (6400)
Precision	lbs. (kg)	4 (2)	8 (4)	16 (8)	30 (15)	50 (25)	100 (50)
Indexing Accuracy	lbs. (kg)	1 (0.5)	2 (0.9)	2 (0.9)	10 (4.5)	10 (4.5)	20 (9)
Test Capacity	lbs. (kg)	1100 (500)	2200 (1000)	4400 (2000)	8800 (4000)	14000 (6400)	28000 (12800)
Net Weight	lbs. (kg)	1.1 (0.5)	1.1 (0.5)	1.1 (0.5)	1.3 (0.6)	1.5 (0.7)	2.3 (1)
Figure dimension in. (mm)	A	8.66 (220)	8.66 (220)	8.66 (220)	9.17 (233)	9.57 (234)	10.8 (274)
	B	3.54 (89.9)	3.54 (89.9)	3.54 (89.9)	3.54 (89.9)	3.81 (96.8)	4.52 (114.8)
	C	1.65 (41.9)	1.65 (41.9)	1.65 (41.9)	1.89 (48.0)	1.89 (48.0)	1.89 (48.0)
	ØD	0.55 (14.0)	0.55 (14.0)	0.55 (14.0)	0.86 (21.8)	0.86 (21.8)	1.1 (27.9)
	E	7.71 (195.8)	7.71 (195.8)	7.71 (195.8)	8.15 (207.0)	8.15 (207.0)	8.54 (216.9)
	F	0.47 (11.9)	0.47 (11.9)	0.47 (11.9)	0.51 (12.7)	0.71 (18.0)	1.14 (29)
	G	1.38 (31.5)	1.38 (31.5)	1.38 (31.5)	1.77 (45.0)	1.77 (45.0)	2.13 (54.1)
	I	0.62 (15.7)	0.62 (15.7)	0.62 (15.7)	1.0 (25.4)	1.0 (25.4)	1.0 (25.4)
	J	1.06 (26.9)	1.06 (26.9)	1.06 (26.9)	1.3 (33.0)	1.3 (33.0)	1.3 (33.0)

Crane Scale CW series

- A compact measuring device for weighing loads during lifting.
- Appropriate tackle can be attached to assist in the lifting and weighing.
- The crane weighers have a liquid crystal display (LCD), which can tare as well as show either the gross or net loads.
- It also indicates the load protection at 110% of the gross weight and the status of the battery.
- Conforms to CE safety standard.

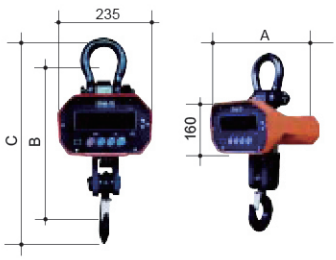

360° Swivelled hook as option

CW100

CW50

CW10

Model		CW05	CW10	CW20	CW30	CW50	CW100	CW150	CW200
Measuring Range	(tonne)	0-0.5	0-1	0-2	0-3	0-5	0-10	0-15	20
Indexing Accuracy	(kg)	0.2	0.5	1	1	2	5	5	5
Resolution Step	(kg)	10	10	20	20	40	100	100	100
Dimension	A (mm)	315	315	315	315	315	355	355	355
	B (mm)	430	430	430	430	570	650	740	760
	C (mm)	540	540	540	540	710	820	930	1000
Net Weight	(kg)	5	11	11	15	21	50	58	60

Work Positioners YE series

- Compact,Aluminium mast light weight and easy operated.
- UP/DOWN button can be hand held as option.
- Lifting capacity is from 100/150kg to 180/200kg.
- 1800mm/2000mm ma×imuim lifting height is available.
- Designed with 4 castors and rear steering castors with barake is standard,integrated brake unit as option.
- Low noise transmission system.
- Build-on-board charger.

Model		YE100	YE150	YE180	YE200
Load Capacity	(kg)	100	150	180	200
Load Centre	(mm)	235	235	200	200
Maximum Fork Height	(mm)	1700	1500	1700	1500
Option Fork Height	(mm)	130	130	130	130
Minimum Fork Height	(mm)	130	130	130	130
Platform Size	(mm)	PVC 605×475	PVC 605×475	PVC 605×475	PVC 605×475
Load Roller Dia.	(mm)	75×20	75×20	75×20	75×20
Lifting/Lowering speed	(mm/s)	55	55	55	55
Steering Wheel	(mm)	100×32	100×32	100×32	100×32
Battery	(Ah)	12×2 -10Ah	12×2 -10Ah	12×2 -12Ah	12×2 -12Ah
Chareger	(V-A)	DC-24V-2A	DC-24V-2A	DC-24V-2A	DC-24V-2A
Overall Dimensions	(mm)	855×605×2150	855×605×1950	855×605×2150	855×605×1950
Net Weight	(kg)	60	59	75	74

Work Positioners M/E series

- Manual models: Operated via a manual hand winch.
  Auto brake system prevents uncontrolled lowering.
- Electric models: Automatic electronic overload protection system ensures safety.
  Maintenance free and sealed batteries, automatic charger.
- Stronger motor, Larger battery 12Ah, Low voltage protection.
  A range of highly manoeuvrable, lightweight lifts, designed to take the strain out of any lifting job from ground level to over shoulder height.
  Ideal for use in narrow aisles and confined spaces. Perfect for all applications from pharmaceutical to catering, from packing line to food processing, from warehouse to office, kitchens, laboratories, retail outlets, etc...
- Quick change attachment options available.
- Conforms to EN1757-1, CE marked.

NEW

Option attachments:

V Block | Spindle | Hook | Roller shaft | Ball Bearing | Double Spindle | Reel Rotator

M100

M200

E150

Stainless steel frame as optional

Universal ball bearing

Model		M100	M200	E100	E150
Type		Manual	Manual	Electric	
Capacity	(kg)	100	200	100	150
Load Centre	(mm)	235	235	235	235
Max. Fork Height	(mm)	1500	1500	1700	1500
Min. Fork Height	(mm)	130	130	130	130
Platform Size	(mm)	470×600	470×600	470×600	470×600
Overall Size	(mm)	840×600×1830	870×600×1920	870×600×1990	870×600×1790
Load Wheel	(mm)	Φ75	Φ75	Φ75	Φ75
Steering Wheel	(mm)	Φ125	Φ125	Φ125	Φ125
Battery, Service Free	(V/Ah)	—	—	24/12	24/12
Net Weight	(kg)	50	60	66	63

Work Positioners E series

- Manual models: Operated via a manual hand winch.
  Auto brake system prevents uncontrolled lowering.
- Electric models: Automatic electronic overload protection system ensures safety.
  Maintenance free and sealed batteries, automatic charger.
- Stronger motor, Larger battery 12Ah, Low voltage protection.
  A range of highly manoeuvrable, lightweight lifts, designed to take the strain out of any lifting job from ground level to over shoulder height.
  Ideal for use in narrow aisles and confined spaces. Perfect for all applications from pharmaceutical to catering, from packing line to food processing, from warehouse to office, kitchens, laboratories, retail outlets, etc...
- Quick change attachment options available.
- Conforms to EN1757-1, CE marked.

NEW

Option attachments:

V Block | Spindle | Hook | Roller shaft | Ball Bearing | Double Spindle | Reel Rotator

E180

E200

E300

Universal ball bearing

Model		E180	E250	E300
Type			Electric	
Capacity	(kg)	180	250	300
Load Centre	(mm)	200	200	200
Max. Fork Height	(mm)	1500/1800	1500/1800	1500/1800
Min. Fork Height	(mm)	130	130	130
Platform Size	(mm)	470x600	480x610	470x600
Overall Size	(mm)		870x740x1920(2220)	
Load Wheel	(mm)	Φ75	Φ75	Φ75
Steering Wheel	(mm)	Φ125	Φ125	Φ125
Battery, Service Free	(V/Ah)	24/20	24/20	24/20
Net Weight	(kg)	85	90	105

Platform Stacker PS·A series

Manual
- Robust construction.
- Hard chromium plated frame.
- Effortless Movement.
- Polyurethane rollers with bearing.
- No-marking castor as standard.
- Conforms to EN1757-1.

Electric
- High quality hydraulic motor made in Korea.
- Service free battery.
- No-marking castor as standard.
- Conforms to EN1757-1.

Noise-free Castor as option.

Option Ladder Model:LD100
Note:Operator must turn two brakes on before step on ladder!

Stainless steel as option

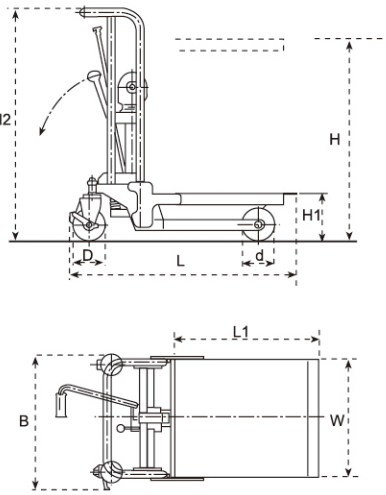

Model		PS2085A	PS2120A	PS4085A	PS4120A	PS4150A
Capacity	(kg)	200	200	400	400	400
Platform Height Max.	H (mm)	850	1200	850	1200	1500
Platform Height Min.	H1 (mm)	200	200	200	200	200
Platform Length	L1 (mm)	600	600	650	650	650
Paltform Width	W (mm)	500	500	550	550	550
Total Length	L (mm)	940	940	1040	1040	1040
Total Width	B (mm)	560	560	590	590	590
Total Height	H2 (mm)	960	1310	970	1310	1610
Steering Rollers-diameter	D (mm)	Ø125	Ø125	Ø150	Ø150	Ø150
Frame Rollers-diameter	d (mm)	Ø75	Ø75	Ø75	Ø75	Ø75
Pump Strokes to Max. Height		14	21	30	45	58
Net Weight	(kg)	53	58	72	78	83
Noise-free Castor		O	O	O	O	O

O = Option

Platform Stacker EP·A series

Manual

- Robust construction.
- Hard chromium plated frame.
- Effortless Movement.
- Polyurethane rollers with bearing.
- No-marking castor as standard.
- Conforms to EN1757-1.

Electric

- High quality hydraulic motor made in Korea.
- Service free battery.
- No-marking castor as standard.
- Conforms to EN1757-1.

Stainless steel as option

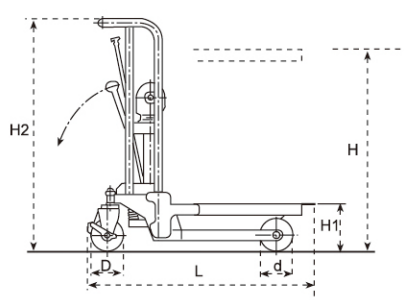

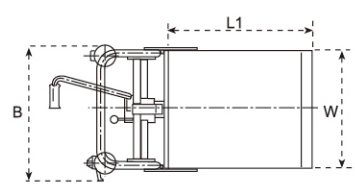

Model		EP2085A	EP2120A	EP4085A	EP4120A	EP4150A
Capacity	(kg)	200	200	400	400	400
Platform Height Max.	H (mm)	850	1200	850	1200	1500
Platform Height Min.	H1 (mm)	200	200	200	200	200
Platform Length	L1 (mm)	600	600	650	650	650
Paltform Width	W (mm)	500	500	550	550	550
Total Length	L (mm)	990	990	1070	1070	1070
Total Width	B (mm)	560	560	590	590	590
Total Height	H2 (mm)	960	1310	970	1310	1610
Steering Rollers-diameter	D (mm)	Ø125	Ø125	Ø150	Ø150	Ø150
Frame Rollers-diameter	d (mm)	Ø75	Ø75	Ø75	Ø75	Ø75
Power Motor	(KW)	0.8	0.8	0.8	0.8	0.8
Battery	(Ah/V)	60/12	60/12	70/12	70/12	70/12
Pump Strokes to Max. Height		14	21	30	45	58
Net Weight	(kg)	88	93	107	113	118
Noise-free Castor		O	O	O	O	O

O = Option

Fork Type Stacker PF·A

- Low profile forks can lift pallet easily.
- No-marking castor as standard.
- Conforms to EN 1757-1.

Manual
- Ladder as option.

Electric
- Easier and faster lifting operation.
- High quality hydraulic motor made in Italy.
- Service free battery.
- Option platform available.

PF Series Fixed Fork

Option Platform
Model: LP10, LP20

PF·A

NEW

Option-Polar with bearing

Model (Fixed Fork)		PF2085A	PF2120A	PF4085A	PF4120A	PF4150A
Capacity	(kg)	200	200	400	400	400
Max. Fork Height	(mm)	850	1200	850	1200	1500
Min. Fork Height	(mm)	85	85	85	85	85
Fork Length	(mm)	600	600	650	650	650
Fixed Fork Width	(mm)	500	500	550	550	550
Load Roller	(mm)	Ø75	Ø75	Ø75	Ø75	Ø75
Steering Wheel	(mm)	Ø125	Ø125	Ø125	Ø125	Ø125
Pump Strokes to Max.Height		19	26	35	50	63
Overall Height	(mm)	1080	1435	1060	1410	1710
Overall Width	(mm)	560	560	590	590	590
Overall Length	(mm)	1000	960	1040	1040	1040
Net Weight	(kg)	55	62	70	76	82
Option Platform		LP10	LP10	LP20	LP20	LP20

Fork Type Stacker PJ·A

NEW

Option: LP20

PJ·A

PJ Series Adjustable Fork

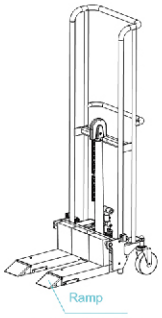

Option-RAMP

Option-Polar with bearing

Model (Adjustable Fork)		PJ2085A	PJ2120A	PJ4085A	PJ4120A	PJ4150A
Capacity	(kg)	200	200	400	400	400
Max. Fork Height	(mm)	850	1200	850	1200	1500
Min. Fork Height	(mm)	85	85	85	85	85
Fork Length	(mm)	600	600	650	650	650
Adjustable Fork Width	(mm)	215-500	215-500	235-500	235-500	235-500
Load Roller	(mm)	Ø75	Ø75	Ø75	Ø75	Ø75
Steering Wheel	(mm)	Ø125	Ø125	Ø125	Ø125	Ø125
Pump Strokes to Max.Height		19	26	35	50	63
Overall Height	(mm)	1080	1435	1060	1410	1710
Overall Width	(mm)	560	560	590	590	590
Overall Length	(mm)	1000	960	1040	1040	1040
Net Weight	(kg)	58	65	75	81	85
Option Platform		LP10	LP10	LP20	LP20	LP20

Stainess Fork Type Stacker ESJ

NEW

- Low profile forks can lift pallet easily.
- No-marking castor as standard.
- Conforms to EN 1757-1.

Electric

- Easier and faster lifting operation.
- High quality hydraulic motor made in Italy.
- Service free battery.
- Option platform available.

Customeried adjustable fork as option

Model (Fixed Fork)		ESJ2085A	ESJ2120A	ESJ4085A	ESJ4120A	ESJ4150A
Capacity	(kg)	200	200	400	400	400
Max. Fork Height	(mm)	850	1200	850	1200	1500
Min. Fork Height	(mm)	85	85	85	85	85
Fork Length	(mm)	600	600	650	650	650
Fixed Fork Width	(mm)	500	500	550	550	550
Load Roller	(mm)	Ø75	Ø75	Ø75	Ø75	Ø75
Steering Wheel	(mm)	Ø125	Ø125	Ø125	Ø125	Ø125
Pump Strokes to Max.Height		19	26	35	50	63
Overall Height	(mm)	1080	1435	1060	1410	1710
Overall Width	(mm)	560	560	590	590	590
Overall Length	(mm)	1020	1020	1100	1100	1100
Chassis Height	(mm)	32.5	32.5	22.5	22.5	22.5
Power motor	(KW)	0.8	0.8	0.8	0.8	00.8
Battery	(Ah/V)	60/12	60/12	70/12	70/12	70/12
Net Weight	kg)	90	97	105	116	122
Option Platform		LP10	LP10	LP20	LP20	LP20

Mini Counter Balance Truck EZ series

Model		EZ2585	EZ2512	EZ2515
Capacity	(kg)	200-250	150-250	150-250
Max. Fork Height	(mm)	750	1100	1400
Min. Fork Height	(mm)	20 (60)	20 (60)	20 (60)
Fork Size (Low)	(mm)	550×70		
Fork size(Standard)	(mm)	600×100		
Adjustable Fork Width	(mm)	1555-550(Low) 215-550(Standard)		
Front Wheel Size	(mm)	Ø125×50		
Rear Wheel Size	(mm)	Ø125×50		
Power Unit	(V/W)	DC 12V/800W		
Battery	(V/Ah)	DC12V/60Ah		
Overall Size (LxWxH)	(mm)	1500×720×1090/1440/1740		
Net Weight	(kg)	218	225	230
Option Paltform		LP20		

Non-standard customized

Electric Fork Type Stacker EJ Series

- Low profile forks can lift pallet easily.
- No-marking castor as standard.
- Conforms to EN 1757-1.

Manual

- Ladder as option.

Electric

- Easier and faster lifting operation.
- High quality hydraulic motor made in Italy.
- Service free battery.
- Option platform available.

Model (Adjustable Fork)		EJ2085A	EJ2120A	EJ4085A	EJ4120A	EJ4150A
Capacity	(kg)	200	200	400	400	400
Max. Fork Height	(mm)	850	1200	850	1200	1500
Min. Fork Height	(mm)	85	85	85	85	85
Fork Length	(mm)	600	600	650	650	650
Adjustable Fork Width	(mm)	215-500	215-500	235-500	235-500	235-500
Load Roller	(mm)	Ø75	Ø75	Ø75	Ø75	Ø75
Steering Wheel	(mm)	Ø125	Ø125	Ø125	Ø125	Ø125
Pump Strokes to Max.Height		19	26	35	50	63
Overall Height	(mm)	1080	1435	1060	1410	1710
Overall Width	(mm)	560	560	590	590	590
Overall Length	(mm)	1020	1020	1100	1100	1100
Chassis Height	(mm)	32.5	32.5	22.5	22.5	22.5
Power motor	(KW)	0.8	0.8	0.8	0.8	00.8
Battery	(Ah/V)	60/12	60/12	70/12	70/12	70/12
Net Weight	(kg)	93	100	110	121	127
Option Platform		LP10	LP10	LP20	LP20	LP20

Fork Type Stacker EK series

- Low profile forks can lift pallet easily.
- No-marking castor as standard.
- Conforms to EN 1757-1.

Electric

- Easier and faster lifting operation.
- High quality hydraulic motor made in Italy.
- Service free battery.
- Option platform available.

Model		EK2235	EK2250
Fork		Fixed	
Capacity	(kg)	200	200
Max.Fork Heihgt	(mm)	2350	2500
Min.Fork Height	(mm)	95	95
Fork Width	(mm)	850	
Steering Wheel	(mm)	125	125
Load Roller	(mm)	75	75
Overal Height	(mm)	1650	1725
Overal Width	(mm)	850	
Battery	(Ah)	12VDC-70Ah	12VDC-70Ah
Power Pack	(KW)	12VDC-0.8kW	12VDC-0.8kW
Ground Clearance	(mm)	23	23

Model		EK5120	EK5150
Fork		Fixed	
Capacity	(kg)	500	500
Max.Fork Heihgt	(mm)	1200	1500
Min.Fork Height	(mm)	95	95
Fork Width	(mm)	850	
Steering Wheel	(mm)	125	125
Load Roller	(mm)	75	75
Overal Height	(mm)	1630	1910
Overal Width	(mm)	850	
Battery	(Ah)	12VDC-70Ah	12VDC-70Ah
Power Pack	(KW)	12VDC-0.8kW	12VDC-0.8kW
Ground Clearance	(mm)	23	23

Mini Type Hand Stacker SHS150

Model		SHS150
Capacity	kg	150
Lifting height	mm	870
Fork Length	mm	545
Fork Width	mm	140-510
Single Fork width	mm	70×30
Min.Fork Height	mm	80
Rear Wheel Dia.	mm	200 Solid Rubber
Leg Length	mm	445
Leg Width	mm	490
Front wheel	mm	50
Overall Length×Width×Height	mm	820×650×1220
Net Weight	kg	43

Stacker **NS/NF** (Adjustable Fork) series

Quick lifting, highly maneuverable!

- A range of highly maneuverable, lightweight lifts, designed to take the strain out of any lifting job from ground level to over shoulder height.
- Heavy duty design.
  Ideal for use in narrow aisles and confined spaces. Perfect for all applications from pharmaceutical to catering, from packing line to food processing, from warehouse to office. kitchens, laboratories, retail outlets, etc...
- Quick lift pump by a pedal provides high efficiency.
- Non-marking castor as standard.
- Conforms to EN1757.

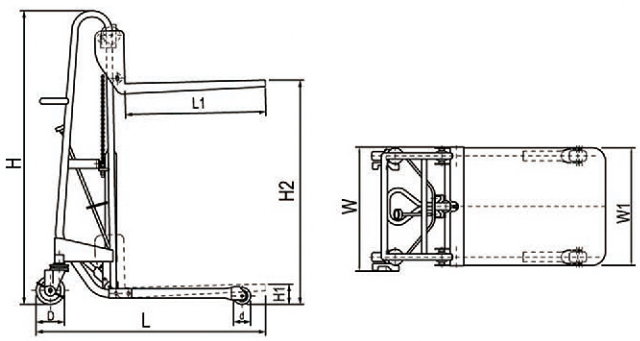

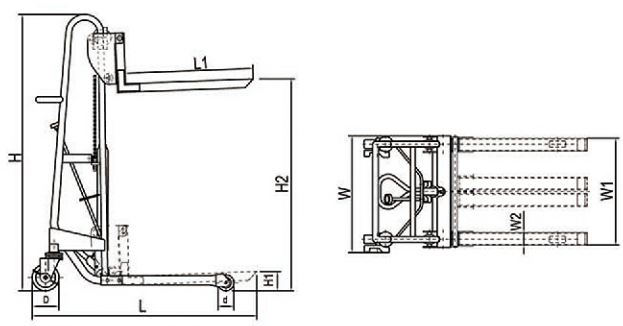

Model		NS2094	NS2010	NS4012	NS4012B	NF2094	NF4012
Capacity	(kg)	200	200	400	400	200	400
Max. Platform Height	H2 (mm)	940	1010	1210	1270	940	1210
Min. Platform Height	H1 (mm)	80	150	90	150	90	90
Platform Length	L1 (mm)	620	620	670	670	—	—
Platform Width	W1 (mm)	520	520	590	590	—	—
Fork Length	L1 (mm)	—	—	—	—	600	700
Single Fork Width	W2 (mm)	—	—	—	—	60	90
Adjustable Fork Width	W1 (mm)	—	—	—	—	130-514	190-572
Total Width	W (mm)	560	560	620	620	560	620
Total Length	L (mm)	1087	1087	1190	1190	1097	1270
Total Height	H (mm)	1290	1315	1610	1635	1290	1610
Steering Rollers-diameter	D (mm)	125	125	125	125	125	125
Frame Rollers-diameter	d (mm)	75	125	75	125	75	75
Pump Strokes to Max. Height	Full Load	29	29	63	63	29	63
	No Load	29	29	20	20	29	20
Net Weight	(kg)	56	58	81	83	55	82

Quick lift available for NS2094, NS2010, NF2094 on inquiry.

Roller Lifter PFG series

PFV

PFG4085
Fixed wheel

PFG4085
Universal wheel

PFG(W)

PFG4120
Fixed wheel

PFG4120
Universal wheel

PFG4120
Extended adjustable rubber roller

PFG4150
Wide leg extended roller

Model	Fixed Front Wheel	PFG2085	PFG2120	PFG4085	PFG4120	PFG4150
	Universal Front Wheel	PFG2085W	PFG2120W	PFG4085W	PFG4120W	PFG4150W
Capacity	(kg)	200	200	400	400	400
Max.Roller Height	(mm)	870	1200	870	1200	1500
Min.Roller Height	(mm)	180/220	180/220	180/220	180/220	180/220
Leg Height (Fixed Wheels)	(mm)	80	80	80	80	80
Leg Height (Universal Wheels)	(mm)	110	110	120	120	120
Max. Diameter of Workpiece	(mm)	100×300	100×300	200×600	200×600	200×600
Roller Size	(mm)	76×500	76×500	76×550	76×550	76×550
Roller Width	(mm)	500-800	500-800	550-800	550-800	550-800
Roller Center Length	(mm)	120	120	180 (240)	180 (240)	180 (240)
Roller Material		Rubber/PU/Galvanized steel/Stainless steel				
Adjustable Center Distance	(mm)	100-250	100-250	100-250	100-250	100-250
Overall Size (LxWxH)	(mm)	680×580×1030	680×580×1380	780×630×1070	780×630×1420	780×630×1720
Front Wheel Diameter	(mm)	75	75	75	75	75
Rear Wheel Diameter	(mm)	125/150	125/150	125/150	125/150	125/150
Pump Stroke		14	21	30	45	58
Net Weight	(kg)	53	58	72	78	85

Roller Lifter ML series

Model		ML850	ML1200	ML1500
Capacity	(kg)	400	400	400
Platform Height Max.	(mm)	850	1200	1500
Roll Width, Diameter		Up to 5 m, 40 cm		
Tray Length	(mm)	800/1200	800/1200	800/1200
Total Height	(mm)	1060	1410	1710
Steering Rollers-Diameter	(mm)	Ø150	Ø150	Ø150
Frame Rollers-Diameter	(mm)	Ø150	Ø150	Ø150
Net Weight (PS/EP)	(kg)	80	84	88

Roll Work Positioner

- Designed for lifting and transporting cylindrical materials;
- High-strength C-type gantry structure, safe and stable;
- High loading cylinder, stable lifting and light weight;
- High quality pump station, maintenance-free battery, reliable and durable;
- Can be customized according to customer requirements;
- A variety of rubber roller changes and accessories are optional, apply for printing, soft pack, pharmaceutical, electronics, chemical and other industries.
- High loading cylinder, stable lifting and light weight;
- High quality pump station, maintenance-free battery, reliable and durable;
- Can be customized according to customer requirements;
- A variety of rubber roller changes and accessories are optional, apply for printing, soft pack, pharmaceutical, electronics, chemical and other industries.

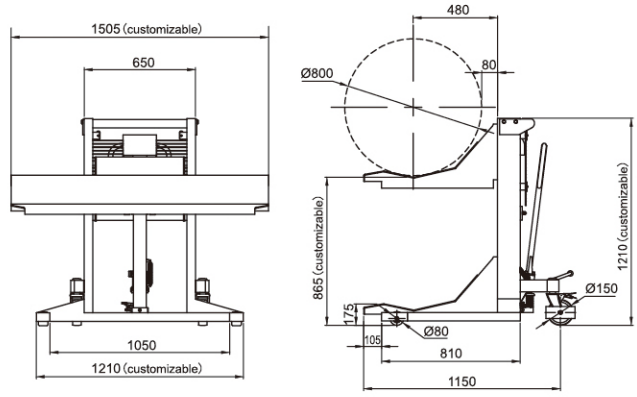

YLM1000D

YLM1000D

YLM1000T

YLM1000T

Roll Work Positioner

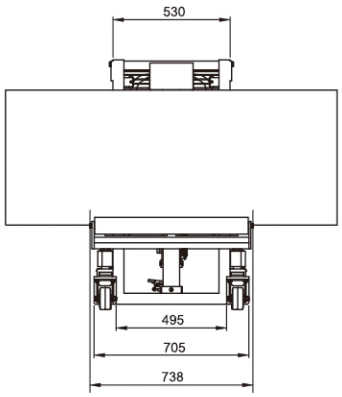

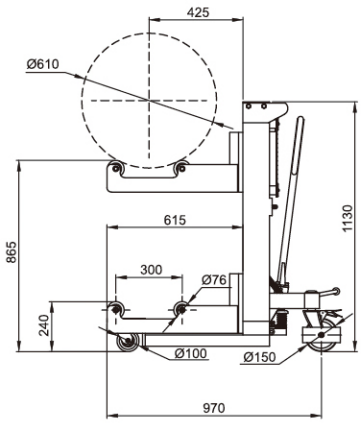

YLM1000R

YLM1000R

YLM1000R

Model		YLM1000D	YLM1000T	YLM1000R
Capacity	(kg)	1000	1000	400
Diameter of roll	(mm)	800	1016	1500
Length of roll	(mm)	5000	1550	1550
Length height	(mm)	865	916	865
Front wheel size	(mm)	Ø80×55	Ø100×55	Ø100×55
Rear wheel size	(mm)	Ø150×55	Ø150×55	Ø150×55
Length of roll pallet	(mm)	1505	700	700
Net Weight	(kg)	225	210	180

Semi-electric Roll Work Positioner

- Electric lifting,long-lasting power;
- Maintenance free battery;
- Can be customized according to customer requirements;

YLE1000T

YLE1000T

Model		YLE1000T
Capacity	(kg)	1000
Diameter of roll	(mm)	1000
Lifting height	(mm)	1500
Front wheel size	(mm)	Ø100×55
Rear wheel size	(mm)	Ø150×55
Length of roll pallet	(mm)	700
Net Weight	(kg)	290

Roll Lfiter

HYDRAULIC ROLL LIFTER REEL LIFT STACKER,REEL TROLLEY

- Frame is made of high quality cold drawn seamless steel tube;
- Specially designed for printing, packaging and paper industry;
- Used for handling rolls of different materials.

Model		YLM850	YLM1200	YLM1500
Load Capacity	(mm)	400	400	400
Lifting Height	(mm)	850	1200	1500
Max. Roll Width	(mm)	2500	5000	5000
Max, Roll Diameter	(mm)	400	400	400
Overall Height	(mm)	1060	1410	1710
Tray Length	(mm)	800	1200	1200
Load Rollers	(mm)	150	150	150
Steering Rollers	(mm)	150	150	150
Net Weight	(mm)	80	84	88

Counterbalanced working positioner EC series

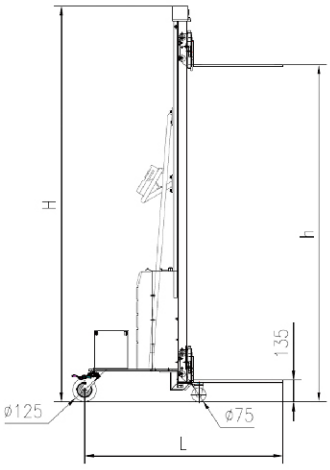

Model		EC1017	EC1515
Type		Electric	
Capacity	kg	100	150
Load centre	mm	235	
Max.Fork Height	mm	1700	1500
Min.Fork Height	mm	135	
Platform size	mm	605×475	
Overall size	mm	1055×605×2010	1055×605×1810
Load wheel Dia.	mm	75	
Steering wheel Dia.	mm	125	
Battery		2×12V/12Ah	
Charger		24V/2A	
Control		PCB/Up-down limit switch	

Mini Stacker PM series

- Light weight design, very easy to operate by hand winch.
- Suitable for super market, office, warehourse, narrow area, ect.
- Adjustable fork.

Model		PM120
Capacity	(kg)	120
Lifting Height	(mm)	1050
Min. Fork Height	(mm)	95
Fork Length	(mm)	400
Individual Fork Width	(mm)	50
Fork Width	(mm)	Adjustable 345-485
Load Wheel	(mm)	Ø50×20
Steering Wheel	(mm)	Ø200/50-140
Net Weight	(kg)	31

Aluminum Hand Stacker STD/BR/BC series

- Forks down for lifting goods, Forks up for supporting.
- Easy Disassembling and assembling .
- Can fit into smaller spaces when disassembled.
- Counter Balance design for easy access the pallet.
- Light Alumium mast, easy for handling.
- Lift by winch, no any hydraulic problem.
- The best brake function with special design is obvious.

STD

BR

BC

Model		STD-181	STD-227	BR-159	BR-181	BR-227	BC-159	BC-181	BC-227
Load Cap.	(kg)	181	227	159	181	227	159	181	227
Lifting Height	(mm)	2500	1200	3000	2500	1200	3000	2500	1200
Overall Dim.	L (mm)	876	876	1092	1092	1092	1168	1168	1168
	W (mm)	610	610	737	737	737	737	737	737
	H (mm)	1702	1702	2026	1702	1702	2026	1702	1702
Load Center	(mm)	254	254	254	254	254	254	254	254

Mini Winch Stacker LS series

- Robust, light weight, steel construction.
- Manoeuvrable, extemely easy to use.
- Cable winch lifting system with fully cable housing.
- Platform is a standard accessory.
- Conforms to EN1757-1.

New Adjustable fork as option
Type A

Standard Adjustable fork
Type B

Platform is a
standard accessory
LS80

Model		LS80	LS150
Capacity	(kg)	80	150
Load Centre	(mm)	250	250
Lifting Height	(mm)	1100	1100
Straddle Leg Height	(mm)	100	100
Min. Fork Height	(mm)	70	70
Fork Length	(mm)	500	500
Individual Fork Width	(mm)	50	50
Platform Size	(mm)	500×530×90	500×530×90
Over Adjustable Fork Width	(mm)	132-520	132-520
Effort Force with Load	(N)	82	106
Load Wheel	(mm)	Ø100×30	Ø100×30
Steering Wheel	(mm)	Ø100×30	Ø100×30
Overall Dimensions	(mm)	865×550×1470	830×580×1475
Net Weight	(kg)	52	62

Important: Forks must be in Max. fork width position when fitting platform on two forks.

Winch Stacker WS series

- Compact and service free design.
- Unique design of winch for easier and safe lifting.
- Heavy duty "C" section mast.
- Adjustable fork width from 160mm to 690mm (WS25, WS50).
- Two parking brakes on steering wheels.
- Conforms to EN1757-1.

WS25/WS50

WS100

WS25, WS50
Type A
Adjustable Fork Standard

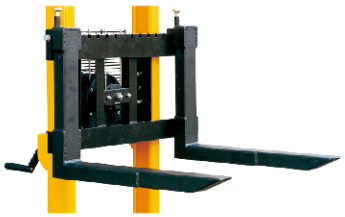

WS25, WS50
Type B
Adjustable Fork Option

Model		WS25	WS50	WS100
Capacity	(kg)	250	500	1000
Load Centre	(mm)	400	500	575
Max.Fork Height	(mm)	1560	1560	1500
Lowered Fork Height	(mm)	90	90	88
Fork Adjustable Width	(mm)	150-690	160-690	540 Fixed
Fork Width	(mm)	60	70	160
Fork Length	(mm)	800	1000	1150
Effort Force to Rated Load	(N)	100	120	100
Lifting Height per Stroke	(mm)	40	22	9.5
Ground Clearance	(mm)	18	18	24
Min.Turning Radius (outside)	(mm)	1075	1075	1250
Front Load Roller	(mm)	Ø80×47	Ø80×47	Ø80×94
Steering Wheel	(mm)	Ø150×40	Ø150×40	Ø150×50
Overall Size (LxWxH)	(mm)	1325×725×2030	1325×725×2030	1600×725×1930
Net Weight	(kg)	140	146	182

Single Mast Stacker SU series

- Designed for heavy-duty, intensive and commercial use.
- Ergonomically designed handle for simple and comfortable operation.
- Single mast without view-obstructing components.
- Easy to operate with quick-lift function.
- Forced synchronous steering on two steering wheels.
- Quick lifting type is available.
- Conforms to EN1757-1.

Model		SU1017
Capacity	(kg)	1000
Max.Fork Height	(mm)	1700
Min.Fork Height	(mm)	88
Fork Length	(mm)	1150
Fork Width	(mm)	540
Net Weight	(kg)	245
Wheel Type		polyurethane
Oversize	(mm)	1615×685×2130

Hand Stacker **PA/PZ/PMS** series

- Latest technology of hydraulic pump with less effort force. Top quality German seal kit.
- Option adjustable forks for wider applications.
- PZ series is economic range but reliable.
- Conforms to EN1757-1.

Footpedal Lifting as option

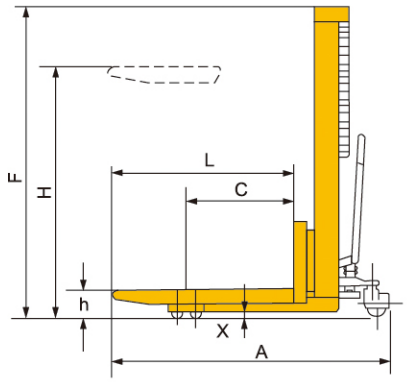

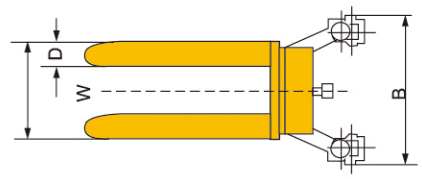

PA
Mast made from H-section steel

PZ1015
Mast made from U-Steel

PMS
Economic type

Model		PA0515	PA1015	PA1025	PA1515	PA2015	PZ1015	PZ1515	PZ2015	PMS1025	PMS1030
Capacity	(kg)	500	1000	1000	1500	2000	1000	1500	2000	1000	1000
Load Centre	C (mm)	585	585	585	585	500	500	500	500	1000	1000
Max. Fork Height	H (mm)	1500	1500	2500	1500	1500	1500	1500	1500	2500	3000
Lowered Fork Height	h (mm)	88	88	88	88	88	80	85	85	90	90
Fork Length	L (mm)	1150	1150	1150	1150	1150	1150	1150	1150	1000	1000
Fork Width	D (mm)	160	160	160	150	150	100	120	120	150	150
Overall Fork Width	W (mm)	540	540	540	346-710	346-710	224-730	252-900	252-900	300-850	300-850
Ground Clearance	X (mm)	24	24	24	24	24	23	24	24	24	24
Min. turning Radius (outside)	(mm)	1086	1086	1086	1100	1100	1250	1350	1350	1250	1250
Front Load Roller	(mm)	Ø80×70	Ø80×70	Ø80×70	Ø80×70	Ø80×70	Ø80×43	Ø80×70	Ø80×70	Ø80×70	Ø80×70
Steering Wheel	(mm)	Ø150×40	Ø150×50	Ø150×50	Ø180×50	Ø180×50	Ø180×50	Ø180×50	Ø180×50	Ø180×50	Ø180×50
Overall Length	A (mm)	1604	1604	1604	1739	1759	1660	1715	1765	1340	1340
Overall Width	B (mm)	794	760	760	800	800	700	940	940	850	850
Overall Height	F (mm)	2010	2010	1960	1977	1977	1998	1980	1980	1810	2060
Net Weight	(kg)	210	220	330	250	280	180	252	284	355	370

Option adjustable fork available: 346-710mm fork width on PA series.

Hand Stacker MT/GT series

Heavy Duty Design.

- Unique technology of quick lift system.
- Compact design and strong, accurate steel construction.
- Top quality hydraulic pump and cylinder with German seals.
- Top of stroke bypass valve built in.
- Conforms to EN1757-1.

MT1015

GT1015

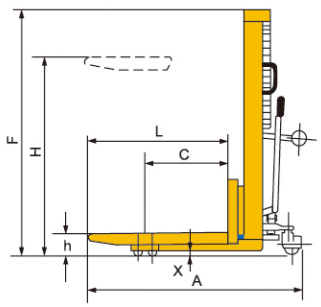

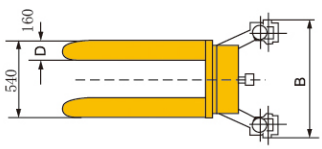

Model		MT1015	MT1029	GT1015	GT1029
Type		Standard		Straddle Leg	
Capacity	(kg)	1000	1000	1000	1000
Load Centre	C (mm)	550	550	550	550
Max. Fork Height	H (mm)	1525	2900	1500	2850
Min. Fork Height	h (mm)	90	90	65	65
Fork Length	L (mm)	1150	1150	1150	1150
Leg Width (inside)	W1 (mm)	—	—	1270	1270
Load Roller	(mm)	Ø78×80	Ø78×80	Ø78×80	Ø78×80
Steering Wheel	(mm)	Ø150×38	Ø150×38	Ø150×38	Ø150×38
Overall Size	AxBxF (mm)	1595×680×1960	1595×680×2000	1595×1395×1960	1595×1395×2000
Net Weight	(kg)	230	370	250	390

Hand Stacker KS series

- Lifted by towbar and lowered by manual control.
- Double action hand pump provides quicker lifting.
- Mechanical switch for unloaded and loaded lift.
- Chain drive steering system offer a maximum manoeuvrability with 180° turning angle.
- Conforms to EN1757-1.

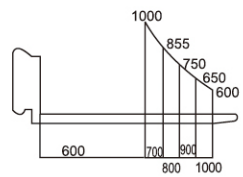

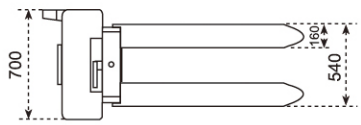

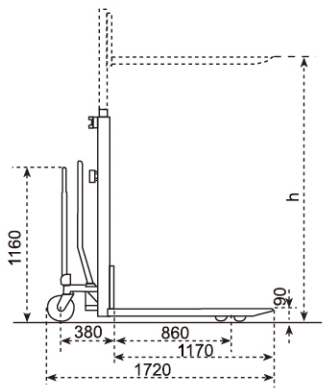

Model		KS1015	KS1027
Capacity	(kg)	1000	1000
Lifting Height	h (mm)	1500	2750
Lifting per Stroke	(mm)	30	30
Min. Fork Height	(mm)	90	90
Fork Length	(mm)	1150	1150
Fork Overall Width	(mm)	540	540
Load Wheel	(mm)	Ø78×80 nylon	Ø78×80 nylon
Steering Wheel	(mm)	Ø150×55 nylon	Ø150×55 nylon
Overall Size	LxWxH (mm)	1600×700×1950	1600×700×1700
Net Weight	(kg)	240	270

Manual Straddle Adjustable Fork PZK

- Unique technology of quick lift system.
- Compact design and strong, accurate steel construction.
- Top quality 1 piece" C" section forks for greatest strength.
- Top of stroke bypass value built in.
- **Conforms to EN1757-1:2001.**

Model		PZK1016
Frame Stage		Straddle
Load Capacity	(kg)	1000
Min. Fork Height	(mm)	45
Max. Fork Height	(mm)	1600
Fork Length	(mm)	1070
Overall Forks Width	(mm)	224-660
Individual Fork Width	(mm)	100
Load Center	(mm)	500
Overall Length	(mm)	1660
Overall Width	(mm)	1300
Overall Height	(mm)	2060
Front Load Roller	(mm)	80×55
Steering Wheel	(mm)	150×50
Wheel Material		Nylon
Net Weight	(kg)	245

Manual Hydraulic Pallet Lifting Stacker with Foot Pedal

- Heavy duty 1 piece "C" section forks for greatest strength;
- Top quality oil cylinder and imported sealed circle is reliable and durable;
- Compact design and strong, accurate steel construction;
- Top grade hydraulic pump and cylinder with German seals;
- Conforms to EN1757 standard;
- It is strictly prohibited to overload,thus to ensure safety.

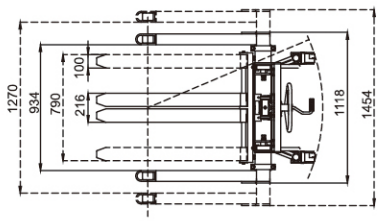

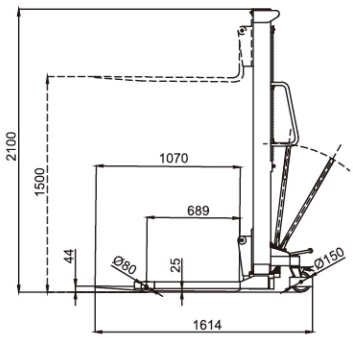

YLF1015A

YLF1015

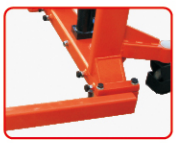

YLF1015A
(Support Legs can be retractable)

YLF1015A
(Support Legs can be retractable)

YLF1024A
(Support Legs can be retractable)

Model		YLF1015	YLF1015A	YLF1024A
Capacity	(kg)	1000	1000	1000
Lifting height	(mm)	1500	1500	2400
Inner width of front leg	(mm)	440	934-1270	900-1260
Turning radius	(mm)	1500	1650	1650
Fork length	(mm)	1075	1070	1070
Single fork width	(mm)	120	100	100
Adjustable fork range	(mm)	250-660	216-790	216-790
Front wheel	(mm)	Φ80×55	Φ80×55	Φ150×50
Rear wheel	(mm)	Φ150×50	Φ150×50	Φ150×50
Overal size	(mm)	2060×745×1640	1614×1118×2100	1632×1050×1900
Net Weight	(kg)	224	296	375

Semi-Electric Hydraulic Forklift Stacker

- Heavy duty design and top quality mast construction;
- Imported pump station provides a smooth lifting;
- High quality maintenance-free battery,save maintenance time and cost,battery notifer and low voltage alarm lamp;
- Light and easy manual steering systm;
- Safety guard on load roller and steering wheel;
- Steel pallet fork is made of whole stamping forming;
- Conforms to EN1757-1:2001 European standard.

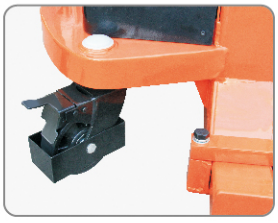

MS1016

MXS1016
(Support Legs can be retractable)

Model		MS1016	MXS1016
Type	(kg)	Standard	Standard
Rated load capacity	(mm)	1000	1000
load center	(mm)	600	600
Min./Max. fork height	(mm)	90/1600	90/1600
Max. Working Height	(mm)	2130	2130
Fork length	(mm)	1000	1000
Fork width	(mm)	970	970
Single fork width	(mm)	120	120
Lifting speed (loaded/unloaded)	(mm/s)	70/120	70/120
Pump station power	(kw/v)	1.5/12	1.5/12
Front wheel size (nylon)	(mm)	Φ80×55	Φ80×55
Rear wheel size (nylon)	(mm)	Φ150×50	Φ150×50
Min. Turning radius	(mm)	1950	1950
Battery	(Ah/V)	120/12	120/12
Overall size (L*W*H)	(mm)	1700×1000×2070	1700×1000×2070
Inner width of front leg	(mm)		934-1270
Adjustable fork range	(mm)		216-790
Net weight	(kg)	324	362

Lateral Pallet Tilter LT0892

- Designed to give the user an ergonomically correct position to reach loads easily without bending down or stretching up.
- Forks can be tilted up to 20° both left and right sides by thread.
- Supplied as standard with parking brake and foot protectors.
- Conforms to EN1757-1.

Model		LT0892
Capacity	(kg)	800
Max.Fork Height	(mm)	920
Min.Fork Height	(mm)	88
Fork Length	(mm)	1150
Fork Width	(mm)	150
Width Over Forks	(mm)	540
Tiltable degree		Left or right 20°
Net Weight	(kg)	210

Pallet Tilter LT series

Manual and Electric Version.

- Designed to give the user an ergonomically correct position to reach loads easily without the necessity of bending down or stretching up.
- Handle can be turned and locked in position away from the work area.
- Applies to both sitting and standing positions.
- Forks can be tilted up to 90°.
- Both are supplied as standard with parking brake and foot protectors.
- Conforms to EN1757-1 and EN1175-1.

LT10M

LT10E

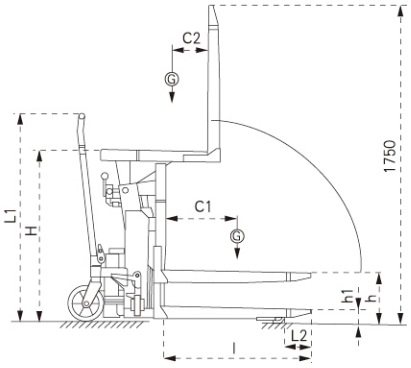

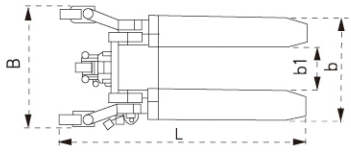

Model		LT10M	LT10E
Type		Manual	Electric
Capacity	(kg)	1000	1000
Lifting Height, Vertical	h (mm)	285	285
Min.Fork Height	h1 (mm)	85	85
Fork Length	l (mm)	800	800
Handle Height	L1 (mm)	1138	1138
Overall Fork Width	b (mm)	520	520
Width Between Forks	b1 (mm)	320	320
Fork Tip Length From Roller	L2 (mm)	135	135
Overall Width	B (mm)	638	638
Overall Length	L (mm)	1325	1410
Overall Height, Raised	H (mm)	950	950
Overall Height, Lowered	H (mm)	750	750
Load Centre Min./Max.	C1 (mm)	200/400	200/400
Load Centre Min./Max.	C2 (mm)	200/420	200/420
Power Unit	(KW/V)	—	0.8/12
Net Weight	(kg)	178	185

Foldable Type Stacker PK series

- Low profile forks can lift pallet easily.
- No-marking castor as standard.
- Conforms to EN 1757-1.

Manual

- Ladder as option.

Electric

- Easier and faster lifting operation.
- High quality hydraulic motor made in Italy.
- Service free battery.
- Option platform available.

NEW

Model		PK5120	PK5160
Load Capacity		500	500
Maximum Fork Height	(kg)	1200	1600
Minimum Fork Height	(mm)	35	35
Fork Length	(mm)	800	800
Fixed Fork Width (PF Series)	(mm)	630	630
Adjustable Fork Width (PJ Series) Range	(mm)	220~550	220~550
Load Roller Dia.	(mm)	100	100
Steering Wheel	(mm)	125	125
Overall Height	(mm)	1450	1850
Overall Width	(mm)	630	630
Overall length	(mm)	1070	1070
Net Weight	(kg)	110	135

Single Mast Stacker SMS series

- Compact and flexible structure
- Convenient driving with comfortable seat
- Safe braking is reasonable and reliable
- Suitable for light load
- No pollution and no noise
- Optional EPS electric power steering system,light and nimble operation.

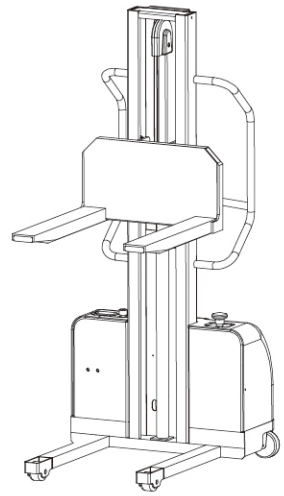

Model		SMS0613	SMS0616	SMS0520	SMS0525
Capacity	Q(Kg)	600	600	500	500
Load center	C(mm)	400	400	300	300
Type of lifting		Electric	Electric	Electric	Electric
Operating type		Walkie	Walkie	Walkie	Walkie
Bearing wheel size	mm	Φ70×60	Φ70×60	Φ70×60	Φ70×60
Steering wheel size	mm	Φ100×50	Φ100×50	Φ100×50	Φ100×50
Min.fork height	mm	90	90	90	90
Max.fork height	h3(mm)	1300	1600	2000	2500
Fork outside width	mm	550			
Fork inside width	mm	370			
Fork length	l(mm)	600			
Single fork size	e/s(mm)	90			
Overall length	L1(mm)	965			
Overall width	b1(mm)	720			
Overall height	h1(mm)	1685	1985	1600	1850
Lift motor	Kw	12/0.8	12/0.8	12V0.8	12V0.8
Battery capacity	V/Ah	12/60			
Battery weight	Kg	10	10	10	10
Net weight	Kg	150	165	200	235

Semi-Electric Stacker **MS** series

- Heavy duty design and top quality mast construction.
- Safety guard on load roller and steering wheel.
- Light and easy manual steering system.
- Stepless speed of lifting/lowering.
- Conforms to EN1757-1.

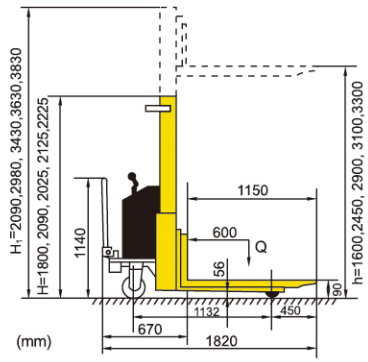

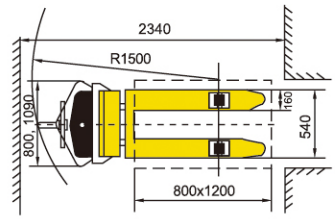

MS

Straddle Leg as Option

Model		MS1016	MS1024	MS1029	MS1031	MS1033	MS1516	MS1524	MS1529	MS1531	MS1533
Capacity	(kg)	1000	1000	1000	1000	1000	1500	1500	1500	1500	1500
Max.Fork Height	h3 (mm)	1600	2450	2900	3100	3300	1600	2450	2900	3100	3300
Min.Fork Height	(mm)	90					90				
Load Center	C (mm)	400					400				
Wheels Base	Y (mm)	1132					1132				
Load Distance	X (mm)	450					450				
Truck Length incl. Fork Face	L2 (mm)	670					670				
Lifting Speed (with/without load)	(mm/s)	95/127					64/96				
Lowering Speed (with/without load)	(mm/s)	106/74					106/74				
Fork Length	l (mm)	1150					1150				
Fork Overall Width	M (mm)	540					540				
Single Fork Width	(mm)	160					160				
Front Wheel	(mm)	Ø82×70					Ø82×70				
Reae Wheel	(mm)	Ø180×50					Ø180×50				
Turning Radius	Wa (mm)	1500					1500				
Power Pack	(KW/V)	1.6/12					1.6/12				
Battery	(Ah/V)	120/12					180×2/12				
Charger	(A/V)	12/12					12/12				
Overall Length	L (mm)	1820					1820				
Overall Width	B (mm)	800	800	800	1000	1000	800	800	800	1000	1000
Overall Height	h1 (mm)	2090	1800	2025	2125	2225	2125	1800	2025	2125	2225
Net Weight (with battery)	(kg)	480	540	580	595	610	480	540	580	595	610

Staddle leg is available.

Semi-Electric Stacker **EMS** series

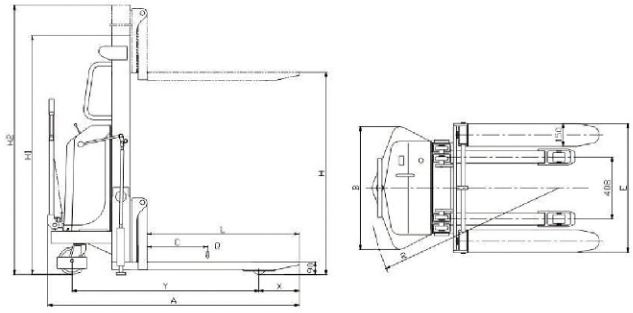

EMS

EMSS

Model		EMS1020	EMS1025	EMS1030	EMS1035	EMS1520	EMS1525	EMS1530	EMS1535	EMS2020	EMSS1016
Rated Capcity	(kg)	1000	1000	1000	1000	1500	1500	1500	1500	2000	1000
Load Center	(mm)	400	400	400	400	400	400	400	400	400	400
Max. Fork Height	(mm)	2000	2500	3000	3500	2000	2500	3000	3500	2000	1600
Max. Machine Height	(mm)	2560	3060	3560	4060	2560	3060	3560	4060	2560	2010
Fork Length	(mm)	1000	1000	1000	1000	1000	1000	1000	1000	1000	1000
Fork Width	(mm)	300-680	300-680	300-680	300-680	300-680	300-680	300-680	300-680	300-680	300-680
Min. Turning Radius	(mm)	1350	1350	1450	1450	1350	1350	1450	1450	1350	1350
Wheel Base	(mm)	1185	1185	1185	1185	1185	1185	1185	1185	1185	1025
Front-Wheel Distance	(mm)	316	316	316	316	316	316	316	316	316	300
Lifting Motor	(V/kw)	12/1.5-1.6	12/1.5-1.6	12/1.5-1.6	12/1.5-1.6	12/1.5-1.6	12/1.5-1.6	12/1.5-1.6	12/1.5-1.6	12/1.5-1.6	12/1.5
Aneroid Battery	(V/Ah)	12/120-150	12/120-150	12/120-150	12/120-150	12/120-150	12/120-150	12/120-150	12/120-150	12/120-150	12/120-150
Charger	(V/A)	12/15	12/15	12/15	12/15	12/15	12/15	12/15	12/15	12/15	12/15
Overall Length	(mm)	1660	1660	1660	1660	1660	1660	1660	1660	1660	1500
Overall Width	(mm)	810	810	930	930	810	810	930	930	810	850
Overall Height	(mm)	1580	1830	2080	2330	1580	1830	2080	2330	1580	2010
Overall Net Weight	(kg)	425	450	470	500	450	475	495	520	470	275

Fix forks available.

Semi-Electric Stacker **MSS** series

- Heavy duty design and top quality mast construction.
- Safety guard on load roller and steering wheel.
- More power for big cap. Traction battery.
- More reliable mast steel imported from Germany.
- Professional stacker with attractive outline.
- Optional built in charge.

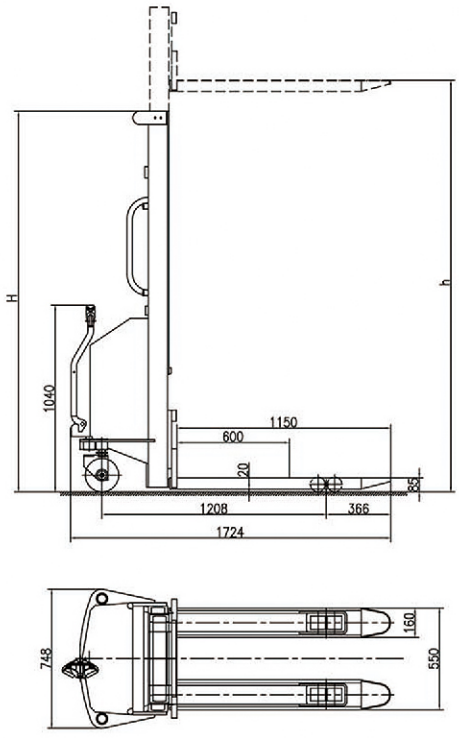

MSS1029

Model		MSS1016	MSS1025	MSS1029	MSS1031	MSS1033	MSS1516
Capacity	(kg)	1000	1000	1000	1000	1000	1500
Max. Fork Height	h (mm)	1600	2500	2900	3100	3300	1600
Min. Fork Height	(mm)	85					
Load Center	(mm)	600					
Fork Length	(mm)	1150					
Fork Overall Width	(mm)	550					
Single Fork Width	(mm)	160					
Lifting Speed	with load (mm/s)	70	75	75	75	80	75
	without load (mm/s)	95	95	100	105	110	95
Lowering Speed	with load (mm/s)	0~400					
	without load (mm/s)	0~180					
Power Pack	(KW)	1.5					
Traction Battery	(V/Ah)	12/100	12/150	12/150	12/150	12/150	12/150
Battery Charger	(V/A)	12/18	12/18	12/18	12/20	12/18	12/18
Front Wheel	(mm)	Ø80x70					
Rear Wheel	(mm)	Ø80x50					
Turning Radius	(mm)	1377					
Overall Size	LxWxH (mm)	1724x748x2055	1724x748x1753	1724x748x1953	1724x748x2053	1724x748x2153	1724x748x2055

Electric Stacker CDD series

Wide Leg Available

CDD10S

CDD10/CDD12

Model		CDD10S	CDD10	CDD12
Mast Type		Single stage	Double-Stage	Double-Stage
Load Capacity	(kg)	1000	1000	1200
Load Center	(mm)	600	600	600
Wheel Base	(mm)	1052	1150	1250
Operating Type		Walkie	Walkie	/Walkie
Wheels Type		PU	PU	PU
Llift Height	(mm)	1600/1950	1600/2500/2900/3100	1600/2500/2900/3100
Lowered Fork Height	(mm)	90	90	90
Fork Size (length/width/thickness)	(mm)	1150/185/55	1150/160/56	1150/160/56
Overall Length	(mm)	1634	1815	1815
Overall Width	(mm)	790	800	800
Outside Width Between Forks	(mm)	550/685	540/680	540/680
Min. Turning Radius	(mm)	1262	1460	1460
Min. Ground Clearance	(mm)	30	30	30
Travel Speed, Laden/Unladen	(km/h)	3/3.5	4.0/5.5	4.0/5.5
Lift Speed, Laden/Unladen	(mm/s)	130/230	90/130	90/130
Lowering Speed, Laden/Unladen	(mm/s)	130/230	95/120	95/120
Gradeability, Laden/Unladen	(%)	5/7	5/7	5/7
Drive Motor / Lift motor / Steering Motor	(KW)	DC0.63/DC2.0	DC0.7/DC2.2	DC0.7/DC2.2
Battery Voltage	(V)	24	24	24
Battery Capacity	(Ah)	70	95	95
Brake		Electromagnetic/Regenerative	Electromagnetic/Regenerative	Electromagnetic/Regenerative
Battery Weight	(kg)	48	50	50
Service Weight with Battery	(kg)	500	545/585/605/635	545/585/605/635

Stacker CDY15D

Capacity:1500kg,Lifting Height:2000-3300mm,Straddle leg as option.

- Separately excited motor,strong climbing ability
- High strength forks
- Built-in charger
- Automatic lifting limit,motor and battery life extension
- Stepless speed control system,safe and quite.
- Controller with multiple automatic protection
- Emergency reversing device.

Model	CDY15D
Mast type	2-Stage STD
Load capacity	1500
Load center	600
Wheel base	1166
Operating type	Walkie
Wheels	
Wheels type	PU
Wheel quantity Driving wheel/Balancewheel/Bearing wheel	
Dimension	
Standard lift height	2000/2500/3000/3300
Max extend height	2515/3015/3515/3815
Mast lowered height	1560/1810/2060/2210
Lowered fork height	90
Fork size(length/width/thickness)	1150（1220）/185/55
Overall length	1764
Overall width	790
Outside width between forks	550/600/650/685
Inside width between forks	180/230/280/315
Min.Turning radius	1365
Min.Aisle width for pallets 800×1200	1970
Min.Aisle width for pallets 1000×1200	1930
Min.ground clearance	30
Performance	
Travel speed,laden/unladen	3/3.5
Lift speed,laden/unladen	100/180
Lowering speed,laden/	120/120
unladen	
Gradeability,laden/unladen	5/7
Electrical configuration	
Drive motor / Lift motor /Steering motor	DC0.63/DC2.2
Battery voltage	24
Battery capacity	85
Brake	Electromagnetic / Regenerative
Weight	
Battery weight	52
Service weight with	760

Full Electric Stacker FE/FE·AC series

DC/AC Driving System.

- Heavy duty design for tough application.
- Top quality electronic control system from Curtis.
- Powerful power pack and drive wheel are made in Europe.
- Drive unit with electromagnetic brake.
- Conforms to EN1757-1, EN1726.

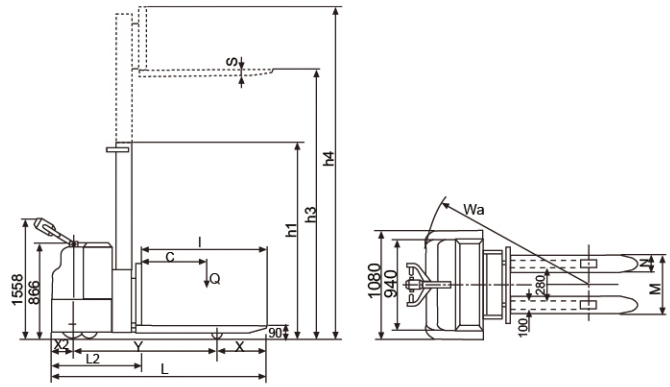

- Platform and handrail is optional

- Straddle leg is optional

Model		FE1216	FE1516	FE1224	FE1524	FE1229	FE1529	FE1231	FE1531	FE1233	FE1533
Model		FE1216AC	FE1516AC	FE1224AC	FE1524AC	FE1229AC	FE1529AC	FE1231AC	FE1531AC	FE1233AC	FE1533AC
Capacity	(kg)	1200	1500	1200	1500	1200	1500	1200	1500	1200	1500
Lifting Height	h3 (mm)	1600	1600	2450	2450	2900	2900	3100	3100	3300	3300
Min. Fork Height	h (mm)	90									
Load Centre	C (mm)	600									
Fork Length	l (mm)	1150									
Fork Width	M (mm)	540									
Travelling Speed		without Load 5.5 km/h, With Full Load 4.8 Km/h									
Lifting Speed		without Load 144 mm/s, With Full Load 95 mm/s									
Lowering Speed		without Load 150 mm/h, With Full Load 65 mm/s									
Motors Traveling	(KW/V)	1.2/24 (AC)									
Motors Lifting	(KW/V)	2.2/24									
Battery (service free)	(Ah/V)	200/24									
Battery Charger	(A/V)	20/24									
Front Roller	(mm)	Ø78×70									
Rear Roller	(mm)	Ø150×75									
Drive Wheel	(mm)	250×80									
Net Weight	(kg)	614	614	670	670	692	692	705	705	714	714
Dimension	X (mm)	460	460	460	460	460	460	460	460	460	460
	S (mm)	56	56	56	56	56	56	56	56	56	56
	X2 (mm)	200	200	200	200	200	200	200	200	200	200
	Y (mm)	1270	1270	1270	1270	1270	1270	1270	1270	1270	1270
	L2 (mm)	780	780	780	780	780	780	780	780	780	780
	L (mm)	1930	1930	1930	1930	1930	1930	1930	1930	1930	1930
	N (mm)	160	160	160	160	160	160	160	160	160	160
	h1 (mm)	2090	2090	1800	1800	2025	2025	2125	2125	2225	2225
	h4 (mm)	2244	2244	3094	3094	3544	3544	3744	3744	3944	3944
	B (mm)	940	940	940	940	940	940	1080	1080	1080	1080
	Wa (mm)	1525	1525	1525	1525	1525	1525	1540	1540	1540	1540

Option: Traction Battery (240Ah/24V).

Full Electric Stacker **FK/BK** series

- Heavy duty design with top quality mast construction.
- Powerful drive wheel and power unit made in Europe.
- Top quality electronic control system from Curtis.
- Conforms to EN1757-1, EN 1726.

Option

Ergonomic Tiller
Made in Germany

Frei

BK1545

FK1545

BKW1555 (straddle leg)

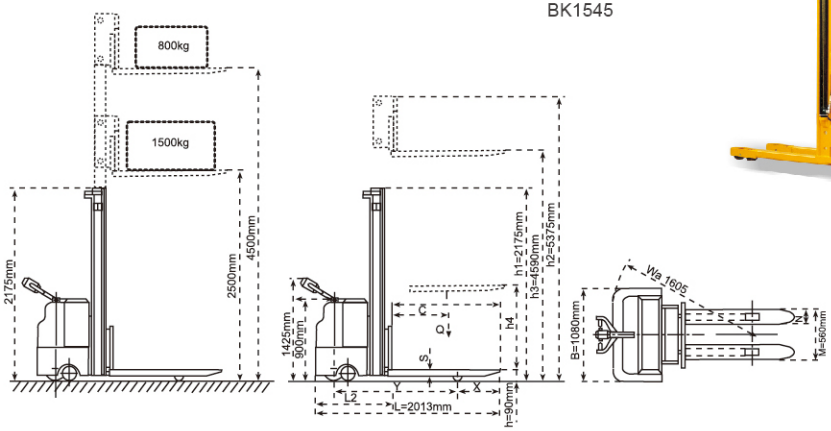

Model		FK1545	BK1545	BKW1555
Type		Standard	Platform	Platform
Capacity	(kg)	1500	1500	1500
Load Centre	(mm)	600	600	600
Max. Fork Height	(mm)	4500	4500	5500
Lowered Fork Height	(mm)	90	90	90
Full Free Lifting Leight	(mm)	1550	1550	1717
Fork Length	(mm)	1150	1150	1000
Fork Overall Width	(mm)	560	560	200-950
Fork Individual Width	(mm)	160	160	160
Travelling Speed (with & without load)	(km/h)	5.2/6.8	5.2/6.8	5.2/6.8
Lifting Speed (with & without load)	(mm/s)	127/170	127/170	127/170
Lowering Speed	(mm/s)	150/128	150/128	127/170
Motors Travelling	(W)	1200	1200	1200
Motors Lifting	(W)	3000	3000	3000
Front Roller, Tandem	(mm)	Ø78×70	Ø78×70	Ø78×70
Rear Roller	(mm)	Ø150×50	Ø150×50	Ø150×50
Driver Wheel	(mm)	Ø250×80	Ø250×80	Ø250×80
Traction Battery	(Ah/V)	240/24	240/24	240/24
Battery Charger	(A/V)	30/24	30/24	30/24
Weight of battery	(kg)	230	230	230
Overall Dimersions	(mm)	2013×1080×2175	2507×1080×2175	2507×940×2175
Net Weight (without battery)	(kg)	1010	1035	1370

Electric Stacker GK series

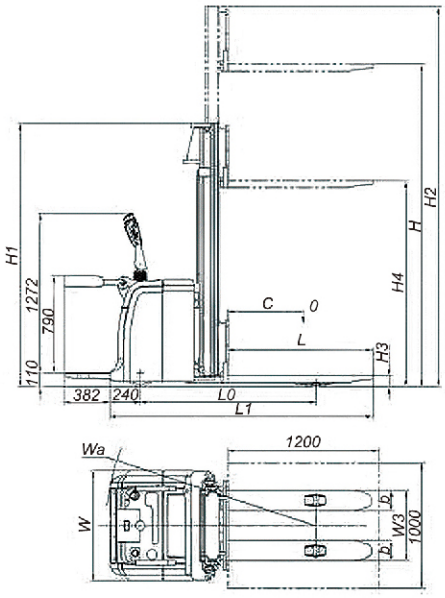

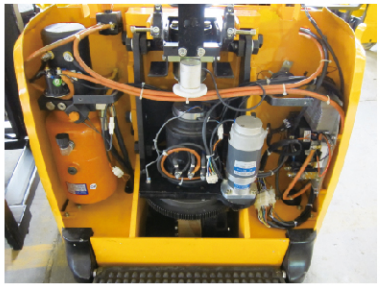

Model		GK12	GK15
Capacity	(Kg)	1200	1500
Load Center	C (mm)	600	
Max. Fork Height	H (mm)	2500/3000/3300/3500/4500/5000/5500/6000	
Overal Length	L1 (mm)	2095	
Overal Width	W (mm)	875	
Overal Height	H1 (mm)	1436/1600/1768/2100/2267/2433/2600	
Maximum Working Height	H2 (mm)	3000/3500/4000/5000/5500/6000/6500	
Free Lift Height	H4 (mm)	886/1050/1218/1550/1716/1884/2052	
Lowered Fork Height	H3 (mm)	H+860	
Maximum Fork Width	W3 (mm)	560/680	
Fork Dimensions	L×b×m (mm)	1150×160×56	
Wheel Base	(mm)	1328	
Minimun Distance Over Ground	x (mm)	30	
Minimun Turning Radius	Wa (mm)	1670	
Traveling Speed (Loaded/Unloaded)	(km/h)	4.0/5.0	
Lifting Speed (Loaded/Unloaded)	(mm/s)	93/143	
Lowering Speed (Loaded/Unloaded)	(mm/s)	120/94	
Front Roller, Tandem	(mm)	Ø78×70	
Balance Roller	(mm)	Ø125×75	
Driving Wheel	(mm)	Ø230×80	
Traction Battery	(Ah/V)	240/24	
Traveling Motor	(kw)	1.5	
Lifting Motor	(kw)	3	
Steering Motor	(kw)	0.16	
Net Weight (without battery)	(kg)	765/845/925/1085/1165/1245/1325	
Battery Weight	(kg)	210	

Electric Reach Stacker CQD series

- Electric powered steering.
- Stand operation, electric powerd traveling and lifting, masts moving forward and backward.
- Saving operation room and aisle.
- Imported electric controller and power unit.
- Sturdy chassis ensure stable and flexible operation.

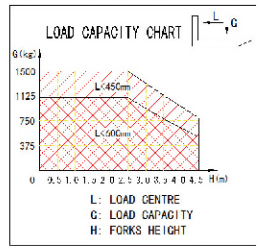

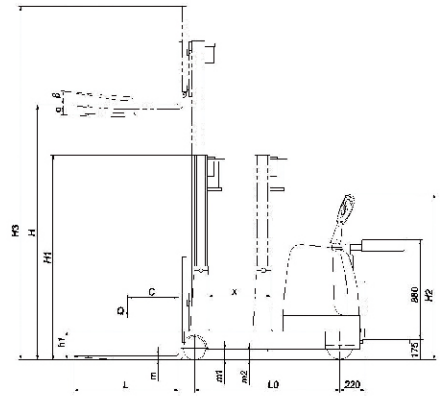

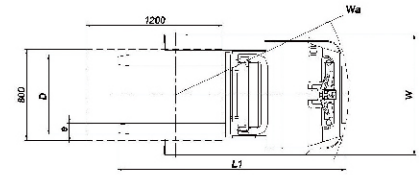

Model		CQD10E	CQD15E
Capacity	Q (kg)	1000	1500
Load Center	C (mm)	450	450
Max. Fork Height	H (mm)	1600/2500/3000/3500/4000/4500/5000/5500/6000	
Max. Overall Height	H3 (mm)	3860	5360
Overall Length (shrinked)	L1 (mm)	2010	2010
Overall Length (extended)	L2 (mm)	2560	2560
Overall Width	W (mm)	1060	1060
Overall Height	H1 (mm)	2100-2383	2100-2383
Handle From Ground	H2 (mm)	1160-1445	1160-1445
Fork Size	L×b×m (mm)	920×100×35	920×100×35
Fork Width	D (mm)	240-700	240-700
Min. Height	m1 (mm)	90	90
Min. Height (Mast)	m2 (mm)	70	70
Wheel Base	L0 (mm)	1280	1280
Material of Wheel		PU	PU
Driving Wheel Size	(mm)	Ø230×80	Ø230×80
Front Wheel Size	(mm)	Ø200×80	Ø200×80
Min. Steering Radius	Wa (mm)	1510	1510
Width of Aisle	1000×1200 pallet (mm)	2545	2545
	800×1200 Pallet (mm)	2590	2590
Mast Tilt Angle	Forward α (°)	2	2
Backward	β (°)	5	5
Max. Travel Speed	(km/h)	6.0	6.0
Gradeability, Laden	(%)	5	5
Brake Type		Electromagnetic	Electromagnetic
Power of Driving Motor	(Kw)	1.5	1.5
Power of Lifting Motor	(Kw)	2.0	3.0
Power of Turning Motor	(Kw)	0.165	0.165
Battery Capacity/Voltage	(Ah/V)	240/24	240/24
Weight of Battery	(kg)	240	240
Net Weight（without battery）	(kg)	1520 (based on 3000mm)	1850 (based on 4500mm)

Counter Balance Stacker FX series

- The non-straddle lift is ideal for feeding machinery or lifting to docks and mezzanines where base legs could interfere.
- Heavy-duty mast can been adjusted to suitable degree.
- Forged fork for easy access.
- Powerful drive and power unit made in Europe.
- Top quality electronic control system from curtis.
- Conforms to EN 1757-1, EN1726.

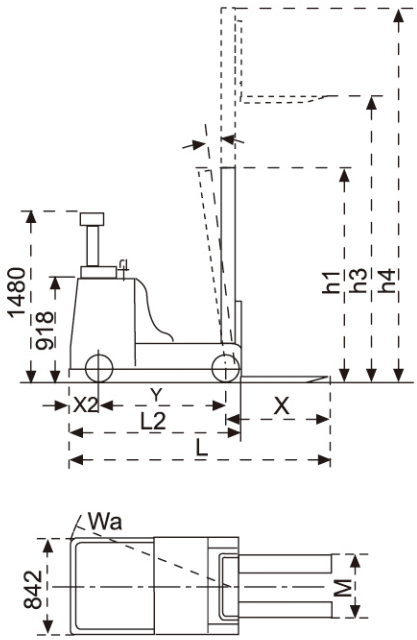

Model		FX0625	FX0733	FX1025
Capacity	(kg)	600	750	1000
Max. Fork Height	(mm)	2500	3300	2500
Lowered Lifting Height	(mm)	35	35	35
Free Lifting Height	(mm)	140	140	140
Load Centre	(mm)	400	400	400
Mast Tilt Angle		-7° ~ 1°	-7° ~ 1°	-7° ~ 1°
Fork Length	(mm)	1000	1000	800
Front Wheel	(mm)	Ø200×80	Ø200×80	Ø200×80
Driver Wheel		1.2KW/24V, Ø250×80mm	1.2KW/24V, Ø250×80mm	1.2KW/24V, Ø250×80mm
Power Pack (Walking)	(Kw/V)	1.2/24	1.2/24	1.2/24
(Lifting)	(Kw/V)	2.0/24	2.0/24	2.0/24
Traction Battery/Charger		240Ah/24V, 210kg; 30A/24V	240Ah/24V, 210kg; 30A/24V	240Ah/24V, 210kg; 30A/24V
Net Weight	(kg)	1515	1515	1515
Dimension	X (mm)	920	920	920
	X2 (mm)	245	245	245
	Y (mm)	1130	1130	1130
	L2 (mm)	1485	1485	1485
	L (mm)	2295	2295	2295
	M (mm)	220-540	220-540	220-540
	N (mm)	100	100	100
	h1 (mm)	1860	2260	1860
	h3 (mm)	2500	3300	2500
	h4 (mm)	3275	4075	3275
	Wa (mm)	1375	1375	1375

Counter Balance Truck CPD15SB

Characters

- Electric powered steering,AC motor,vertical driving unit.
- Three fulcrum type, compact structure, small steering radius. Suitable for operating at aisles and
- Also named pallet stacker without legs,fitted for all pallets.
- Smooth double lift cylinders and masts with open eyeview.
- Imported electric contorller and hydraulic power unit, core encapsulating PU wheels.
- Easy to mantenance or repair.standing platform optional.

Model			CPD15SB
Load Capacity		Q (kg)	1500
Load Center		C (mm)	450
Overall Length		L1 (mm)	2535
Overall Width		W (mm)	950
Min. Overall Height		H1 (mm)	2050
Height of Handle		H2 (mm)	1160～1445
Dimension of Forks		L×b×m (mm)	920×100×35
Outside Width of Forks		D (mm)	240～580
Ground Clearance, Chassis		m1 (mm)	90
Ground Clearance, Masts		m2 (mm)	70
Base Distance		L0 (mm)	1250
Wheel Material			PU
Front Wheel Size		(mm)	Ø200×80
Driving Wheel Size		(mm)	Ø230×80
Balance Wheel Size		(mm)	Ø125×50
Min. Steering Radius		Wa (mm)	1480
Width of Aisle	1000X1200 pallet	(mm)	2970
	800X1200 Pallet	(mm)	3080
Lift Height		H (mm)	3000/4500
Max. Overall Height		H3 (mm)	3860/5360
Mast Tilt Angle	forward α	(°)	2
	Backward β	(°)	5
Max. Travel Speed		(Km/h)	6.0
Lift Speed（laden/unladen）		(mm/s)	100/135
Lowering Speed（laden/unladen）		(mm/s)	325/220
Gradeability, Laden		(%)	8
Brake Type			electromagnetic
Power of Driving Motor		(Kw)	1.5
Power of Lift Motor		(Kw)	3.0
Battery Capacity/Voltage		(Ah/V)	240/24
Weight of Battery		(kg)	240
Net Weight（without battery）		(kg)	1580/1740

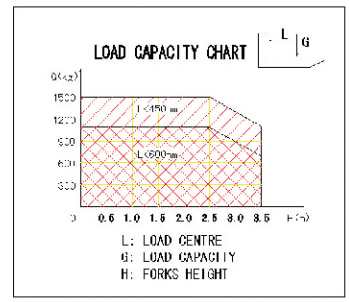

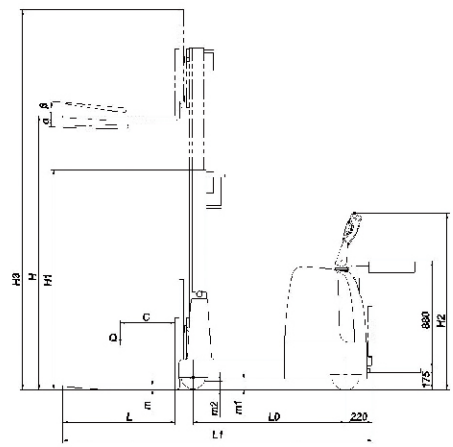

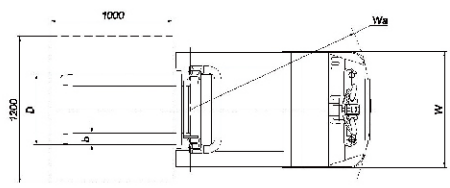

Standard-type counter balance electric forklift CPD series

- Compact and flexible structure
- Convenient driving with comfortable seat
- Safe braking is reasonable and reliable
- Suitable for light load
- No pollution and no noise
- Optional EPS electric power steering system,light and nimble operation.

Model				CPD10					
Config-code	Standard type			SC10		SC13		SC15	
	EPS			SCZ13		SCZ13		SCZ15	
Drive Unit				Elecctric					
Operation type				Seated					
Load capacity		Q	kg	1000		1300		1500	
Load center		C	mm	400					
Overall length		L	mm	2390		2540		2540	
Overall width/Front wheels		b	mm	800/1004					2220
overall height	Closed mast		mm	1870	2220	1870	2220	1870	
	Overhead guard	H2	mm	1885					3200
Lift height		H	mm	2500	3200	2500	3200	2500	3975
Max working height		H1	mm	3275	3975	3275	3975	3275	
Free lift height		H3	mm	140					
Fork dimensions		L1×b2×m	mm	800×100×32		800×100×35		800×100×35	
Maximum fork width		b1	mm	215~650					
Minimum ground clearance		m1	mm	80					
Min. aisle width for stacking		Ast	mm	2765		2920		2920	
Mast obliquity		α/β	°	1/7					
Turning radius		Wa	mm	1440		1590		1590	
Drive motor power			kw	2.0					
Lift motor power			kw	2.0					
Battery			Ah/V	300/24					1650
Weight w/o battery			kg	1465	1490	1500	1525	1625	
Battery weight			kg	275					

Economic Single Mast Stacker CDY10S

Capacity:1000kg,Lifting Height:1600-1950mm

- Separately excited motor,strong climbing ability
- High strength forks
- Built-in charger
- Automatic lifting limit,motor and battery life extension
- Stepless speed control system,safe and quite.
- Controller with multiple automatic protection
- Emergency reversing device.

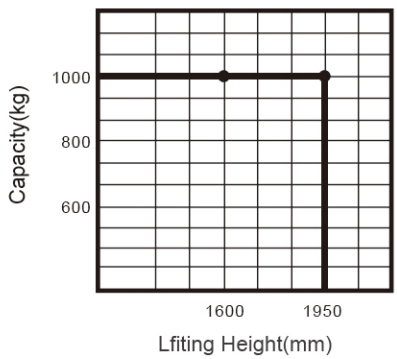

Model		CDY10S
Mast type		Single stage
Load capacity	kg	1000
Load center	mm	600
Wheel base	mm	1052
Operating type		Walkie
Wheels type		PU
Wheel quantity Driving wheel/Balance wheel/Bearing wheel	mm	1/1/4
Standard lift height	mm	1600/1950
Max extend height	mm	1985/2335
Mast lowered height	mm	2065/2240
Lowered fork height	mm	90
Fork size(length/width/thickness)	mm	1150(1220)/185/55
Overall length	mm	1634
Overall width	mm	790
Outside width between forks	mm	550/600/650/685
Inside width between forks	mm	180/230/280/315
Min.Turning radius	mm	1262
Min.Aisle width for pallets 800×200	mm	1841
Min.Aisle width for pallets 1000×≡200	mm	1883
Min.ground clearance	mm	30
Travel speed,laden/unladen	km/h	3/3.5
Lift speed,laden/unladen	mm/s	130/230
Lowering speed,laden/unladen	mm/s	130/230
Gradeability,laden/unladen	%	5/7
Drive motor / Lift motor /Steering motor	KW	DC0.63/DC2.0
Battery voltage	V	24
Battery capacity	Ah	70
Brake		Electromagnetic
Battery weight	kg	48
Service weight with battery	kg	460

Economic Single Mast Stacker CDY10S-W - Straddle Leg

Capacity:1000kg,Lifting Height:1600-1950mm

- Separately excited motor,strong climbing ability
- High strength forks
- Built-in charger
- Automatic lifting limit,motor and battery life extension
- Stepless speed control system,safe and quite.
- Controller with multiple automatic protection
- Emergency reversing device.

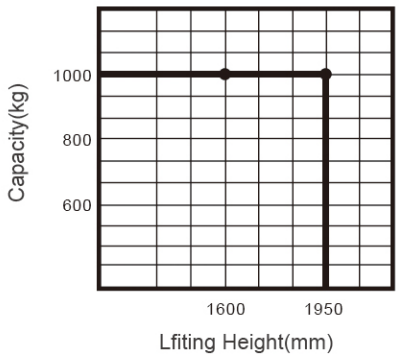

Model		CDY10S-W (Straddle leg)
Mast type		Single stage
Load capacity	kg	1000
Load center	mm	600
Wheel base	mm	1134
Operating type		Walkie
Wheels type		PU
Wheel quantity Driving wheel/Balance wheel/Bearing wheel	mm	1/1/2
Standard lift height	mm	1600/1950
Max extend height	mm	2055/2450
Lowered fork height	mm	55
Fork size(length/width/thickness)	mm	1070/100/40
Overall length	mm	1640
Overall width	mm	940
Outside width between forks	mm	200-812
Inside width between forks	mm	0-612
Min.Turning radius	mm	1344
Min.Aisle width for pallets 800×1200	mm	1894
Min.Aisle width for pallets 1000×1200	mm	1936
Min.ground clearance	mm	50
Travel speed,laden/unladen	km/h	3/3.5
Lift speed,laden/unladen	mm/s	130/230
Lowering speed,laden/unladen	mm/s	130/230
Gradeability,laden/unladen	%	5/7
Drive motor / Lift motor /Steering motor	KW	DC0.63/DC2.0
Battery voltage	V	24
Battery capacity	Ah	70
Brake		Electromagnetic
Battery weight	kg	48
Service weight with battery	kg	458

Economic Single Mast Stacker CDY10D

Capacity:1000kg,Lifting Height:2000-3300mm,Straddle leg as option.

- Separately excited motor,strong climbing ability
- High strength forks
- Built-in charger
- Automatic lifting limit,motor and battery life extension
- Stepless speed control system,safe and quite.
- Controller with multiple automatic protection
- Emergency reversing device.

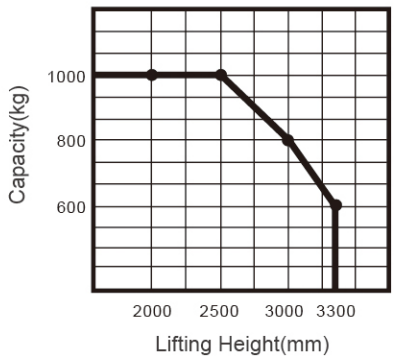

Model		CDY10D
Mast type		2-Stage STD
Load capacity	kg	1000
Load center	mm	600
Wheel base	mm	1150
Operating type		Walkie
Wheels type		PU
Wheel quantity Driving wheel/Balance wheel/Bearing wheel	mm	1/1/4
Standard lift height	mm	2000/2500/3000/3300
Max extend height	mm	2385/2885/3385/3685
Mast lowered height	mm	1550/1800/2050/2200
Lowered fork height	mm	90
Fork size(length/width/thickness)	mm	1150(1220)/185/55
Overall length	mm	1733
Overall width	mm	790
Outside width between forks	mm	550/600/650/685
Inside width between forks	mm	180/230/280/315
Min.Turning radius	mm	1350
Min.Aisle width for pallets 800×1200	mm	1914
Min.Aisle width for pallets 1000 ×1200	mm	1955
Min.ground clearance	mm	30
Travel speed,laden/unladen	km/h	3/3.5
Lift speed,laden/unladen	mm/s	130/230
Lowering speed,laden/unladen	mm/s	130/230
Gradeability,laden/unladen	%	5/7
Drive motor / Lift motor /Steering motor	KW	DC0.63/DC2.0
Battery voltage	V	24
Battery capacity	Ah	70
Brake		Electromagnetic / Regenerative
Battery weight	kg	48
Service weight with battery	kg	580

Economic Single Mast Stacker CDY10D-W - Straddle Leg

Capacity:1000kg,Lifting Height:1600-1950mm

- Separately excited motor,strong climbing ability
- High strength forks
- Built-in charger
- Automatic lifting limit,motor and battery life extension
- Stepless speed control system,safe and quite.
- Controller with multiple automatic protection
- Emergency reversing device.

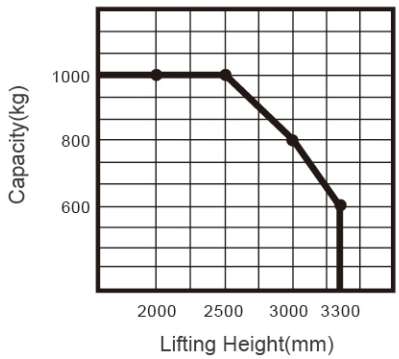

Model		CDY10D-W(Straddle Leg)
Mast type		2-Stage STD
Load capacity	kg	1000
Load center	mm	600
Wheel base	mm	1204
Operating type		Walkie
Wheels type		PU
Wheel quantity Driving wheel/Balance wheel/Bearing wheel	mm	1/1/2
Standard lift height	mm	2000/2500/3000/3300
Max extend height	mm	2387/2887/3387/3687
Mast lowered height	mm	1615/1865/2115/2265
Lowered fork height	mm	55
Fork size(length/width/thickness)	mm	1070/100/40
Overall length	mm	1721
Overall width	mm	940
Outside width between forks	mm	200-812
Inside width between forks	mm	0-612
Min.Turning radius	mm	1411
Min.Aisle width for pallets 800×1200	mm	1970
Min.Aisle width for pallets 1000×1200	mm	2010
Min.ground clearance	mm	50
Travel speed,laden/unladen	km/h	3/3.5
Lift speed,laden/unladen	mm/s	130/230
Lowering speed,laden/unladen	mm/s	130/230
Gradeability,laden/unladen	%	5/7
Drive motor / Lift motor /Steering motor	KW	DC0.63/DC2.0
Battery voltage	V	24
Battery capacity	Ah	70
Brake		Electromagnetic / Regenerative
Battery weight	kg	48
Service weight with battery	kg	596

Electric Stacker with AC Driving System CDY10-AC

Capacity:1000kg,Lifting Height:2000-3600mm

- Mechanical steering-Economic,comfortable,more reliable.
- AC driving system-Quite,without carbon brush and free maintenance
- Electric lifting-Rapid,efficient,electricity limit switch is STD.
- Short wheel base-Small turning radius,suitable for narrow space.
- Energy conservation
- AC controller-Stepless.strong power,multiple automatic protection.
- Intelligent control-Regenerative braking,antomatic energy recovery.

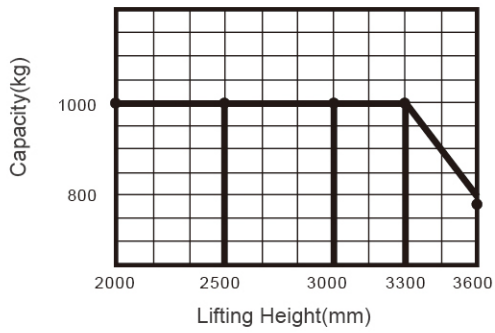

Model		CDY10-AC
Mast type		2-Stage STD
Load capacity	kg	1000
Load center	mm	600
Wheel base	mm	1285
Operating type		Walkie
Wheels type		PU
Wheel quantity Driving wheel/Balance wheel/Bearing wheel		1/1/4
Standard lift height	mm	2000/2500/3000/3300/3600
Lowered fork height	mm	90
Fork size(length/width/thickness)	mm	1150(1220)/185/55
Overall length	mm	1898
Overall width	mm	806
Max extend height	mm	2385/2885/3385/3685/3985
Mast lowered height	mm	1550/1800/2050/2200/2350
Min.Turning radius	mm	1475
Min.Aisle width for pallets 800×1200	mm	2045
Min.Aisle width for pallets 1000×1200	mm	2084
Min.ground clearance	mm	30
Travel speed,laden/unladen	km/h	3.5/4
Lift speed,laden/unladen	mm/s	130/230
Lowering speed,laden/unladen	mm/s	130/230
Gradeability,laden/unladen	%	5/7
Drive motor / Lift motor /Steering motor	KW	AC0.95/DC2.5
Battery voltage	V	24
Battery capacity	Ah	210
Brake		Electromagnetic / Regenerative
Controller		CURTIS 1230
Battery weight	kg	190
Service weight with battery	kg	1010

Full Electric Stacker CDY12E/14E with EPS system

Capacity:1200/1400kg,Lifting Height:1400-4000mm

- Electronic power steering system
- Two-way magnetic valve,three drop speed mode.
- Drive unit floating bodies with patent design.
- AC driving system,no carbon brush,maintenance free.
- USA CURTIS driving controller.
- Automatic lifting limit,proximity switch.
- Cuve automatic deceleration devices,more safer.
- Goods high position,vehicle automatic deceleration.
- Stepless speed control system,safe and quiet.

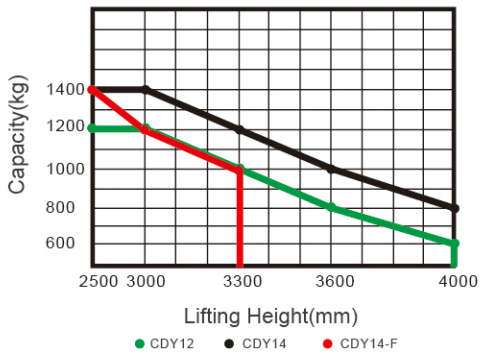

Model		CDY12E	CDY14E	CDY14FE
Mast type		2-Stage STD	2-Stage STD	Full free 2-Stage
Load capacity	kg	1200	1400	1400
Load center	mm	600	600	600
Wheel base	mm	1270	1325	1325
Operating type		Walkie / Stand On	Walkie / Stand On	Walkie / Stand On
Wheels type		PU	PU	PU
Wheel quantity Driving wheel/Balance wheel/Bearing wheel		1/2/4	1/2/4	1/2/4
Standard lift height	mm	2000/2500/3000 /3300/3600/4000	1400/2000/2500/3000 /3300/3600/4000	2500/3000/3300
Lowered fork height	mm	85	85	85
Fork size(length/width/thickness)	mm	1150/185/55	1150/185/55	1150/185/55
Overall length	mm	1993/2413	2050/2470	2050/2470
Overall width	mm	812	856	856
Max. extend height	mm	2500/3000/3500 /3800/4100/4500	1900/2500/3000/3500 /3800/4100/4500	3000/3500/3800
Mast lowered height	mm	1535/1765/1980 /2135/2335/2500	1185/1535/1765/1980 /2135/2335/2500	1830/2080/2180
Min.Turning radius	mm	1525/1935	1580/1990	1580/1990
Min.Aisle width for pallets 800×1200	mm	2130/2520	2180/2580	2180/2580
Min.Aisle width for pallets 1000×1200	mm	2160/2540	2210/2600	2210/2600
Min.ground clearance	mm	30	30	30
Travel speed,laden/unladen	km/h	5/5	5/5	5/5
Lift speed,laden/unladen	mm/s	130/230	130/230	130/230
Lowering speed,laden/unladen	mm/s	130/230	130/230	130/230
Gradeability,laden/unladen	%	5/7	5/7	5/7
Drive motor / Lift motor /Steering motor	KW	AC1.5/DC3/DC0.15	AC1.5/DC3/DC0.15	AC1.5/DC3/DC0.15
Battery voltage	V	24	24	24
Battery capacity	Ah	210	280	280
Brake		Electromagnetic / Regenerative	Electromagnetic / Regenerative	Electromagnetic / Regenerative
Controller		CURTIS	CURTIS	CURTIS
Battery weight	kg	190	250	250
Service weight with battery	kg	1110	1204	1330

Full Electric Stacker CDY16E/20E with EPS system

Capacity:1600/2000kg,Lifting Height:1400-5800mm

- Electronic power steering system
- Two-way magnetic valve,three drop speed mode.
- Drive unit floating bodies with patent design.
- AC driving system,no carbon brush, maintenance free.
- USA CURTIS driving controller.
- Automatic lifting limit,proximity switch.
- Cuve automatic deceleration devices,more safer.
- Goods high position,vehicle automatic deceleration.
- Stepless speed control system,safe and quiet.

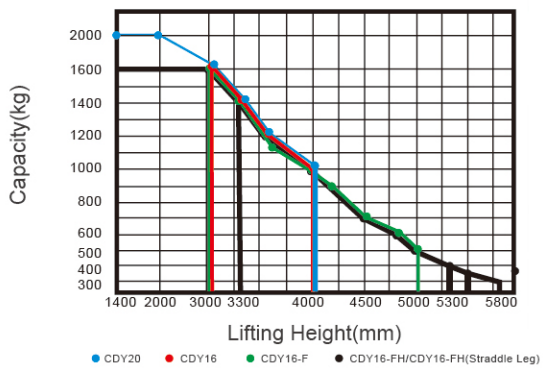

Model		CDY16E	CDY16FE	CDY16FHE	CDY20E
Mast type		Double-Stage	Full free 3-stage	Full free 3-stage	Double-Stage
Load capacity	kg	1600	1600	1600	2000
Load center	mm	600	600	600	600
Wheel base	mm	1325	1375	1375	1325
Operating type		Walkie/Stand On	Walkie/Stand On	Walkie/Stand On	Walkie/Stand On
Wheels type		PU	PU	PU	PU
Standard lift height	mm	2500/3000 /3300/3600	3700/3900/4200 /4500/4700/5000	5300/5500/5800	2000/2500/3000 /3300/3600/4000
Lowered fork height	mm	90	90	90	90
Fork size(length/width/thickness)	mm	1150(1220)/185/55	1150(1220)/185/55	1150(1220)/185/55	1150(1220)/185/55
Overall length	mm	2050/2470	2105/2525	2105/2525	2050/2470
Overall width	mm	856	957	957	856
Mast lowered height	mm	1765/1980/ 2135/2335	1800/1900/1985 /2085/2135/2235	2520/2590/2690	1185/1535
Min.Turning radius	mm	1580/1990	1630/2040	1630/2040	1580/1990
Min.Aisle width for pallets 800×1200	mm	2180/2580	2230/2625	2230/2625	2180/2580
Min.ground clearance	mm	30	30	30	30
Travel speed,laden/unladen	km/h	5/5	5/5	5/5	4/4.5
Lift speed,laden/unladen	mm/s	130/230	130/230	130/230	90/170
Lowering speed,laden/unladen	mm/s	130/230	130/230	130/230	80/170
Gradeability,laden/unladen	%	5/7	5/7	5/7	5/7
Drive motor/Lift motor/Steering motor	KW	AC1.5/DC3/DC0.15	AC1.5/DC3/DC0.15	AC1.5/DC3/DC0.15	AC1.5/DC3/DC0.15
Battery voltage	V	24	24	24	24
Battery capacity	Ah	280	280	280	280
Brake		Electromagnetic / Regenerative	Electromagnetic / Regenerative	Electromagnetic / Regenerative	Electromagnetic / Regenerative
Battery weight	kg	235	235	235	235
Service weight with battery	kg	1240	1578	1610	1240

Full Electric Stacker CDY14E/16E-W with EPS system - Straddle Leg

Capacity:1400/1600kg,Lifting Height:1400-5800mm

- Electronic power steering system
- Two-way magnetic valve,three drop speed mode.
- Drive unit floating bodies with patent design.
- AC driving system,no carbon brush, maintenance free.
- USA CURTIS driving controller.
- Automatic lifting limit,proximity switch.
- Cuve automatic deceleration devices,more safer.
- Goods high position,vehicle automatic deceleration.
- Stepless speed control system,safe and quiet.

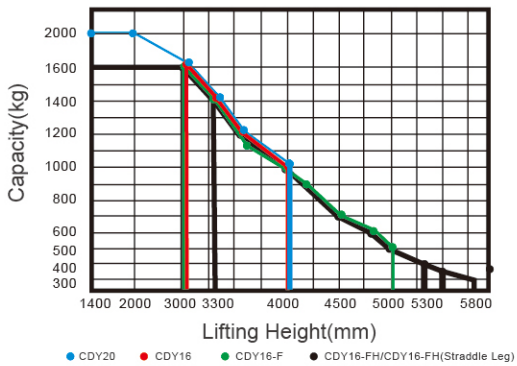

Model		CDY14E-W	CDY16E-W	CDY16FE-W	CDY16FHE-W
Type		Straddle Leg	Straddle Leg	Straddle Leg	Straddle Leg
Mast type		2-Stage STD	2-Stage STD	Full free 3-Stage	Full free 3-Stage
Load capacity	kg	1400	1600	1600	1600
Load center	mm	600	600	600	600
Wheel base	mm	1310	1310	1375	1375
Operating type		Walkie/Stand On	Walkie/Stand On	Walkie/Stand On	Walkie/Stand On
Wheels type		PU	PU	PU	PU
Wheel quantity Driving wheel/Balance wheel/Bearing wheel		1/2/4	1/2/4	1/2/4	1/2/4
Standard lift height	mm	1400/2000/2500/3000 /3300/3600/4000	1400/2000/2500/3000 /3300/3600/4000	3700/3900/4200 /4500/4700/5000	5300/5500/5800
Lowered fork height	mm	55	55	55	85
Fork size(length/width/thickness)	mm	1070/100/40	1070/100/40	1070/100/40	1070/100/40
Overall length	mm	2005/2425	2005/2425	2073/2493	2073/2493
Overall width		1470	1470	1470	1470
Max. extend height	mm	1900/2500/3000/3500/ 3800/4100/4500	1900/2500/3000/3500 /3800/4100/4500	4200/4400/4700 /5000/5200/5500	5800/6000/6300
Mast lowered height	mm	1185/1535/1765/1980/ 2135/2335/2500	1185/1535/1765/1980 /2135/2335/2500	1800/1900/1985 /2085/2135/2235	2520/2590/2690
Min.Turning radius	mm	1565/1975	1565/1975	1630/2040	1630/2040
Min.Aisle width for pallets 800×1200	mm	2230/2560	2230/2560	2230/2625	2230/2625
Min.Aisle width for pallets 1000×1200	mm	2260/2585	2260/2585	2260/2650	2260/2650
Min.ground clearance	mm	50	50	50	30
Travel speed,laden/unladen	km/h	5/5	5/5	5/5	5/5
Lift speed,laden/unladen	mm/s	130/230	130/230	130/230	130/230
Lowering speed,laden/unladen	mm/s	130/230	130/230	130/230	130/230
Gradeability,laden/unladen	%	5/7	5/7	5/7	5/7
Drive motor / Lift motor /Steering motor	KW	AC1.5/DC3/DC0.15	AC1.5/DC3/DC0.15	AC1.5/DC3/DC0.15	AC1.5/DC3/DC0.15
Battery voltage	V	24	24	24	24
Battery capacity	Ah	280	280	280	280
Brake		Electromagnetic/Regenerative	Electromagnetic/Regenerative	Electromagnetic/Regenerative	Electromagnetic/Regenerative
Controller		CURTIS 1230	CURTIS 1230	CURTIS 1230	CURTIS 1230
Battery weight	kg	235	235	235	235
Service weight with battery	kg	1300	1370	1648	1680

Counterbalanced Electric Stacker CBSY06E/12E/16E with EPS system

Capacity:600-1600kg,Lifting Height:1400-4500mm

- Electronic power steering system
- Two-way magnetic valve,three drop speed mode.
- Drive unit floating bodies with patent design.
- AC driving system,no carbon brush,maintenance free.
- USA CURTIS driving controller.
- Automatic lifting limit,proximity switch.
- Cuve automatic deceleration devices,more safer.
- Goods high position,vehicle automatic deceleration.
- Stepless speed control system,safe and quiet.

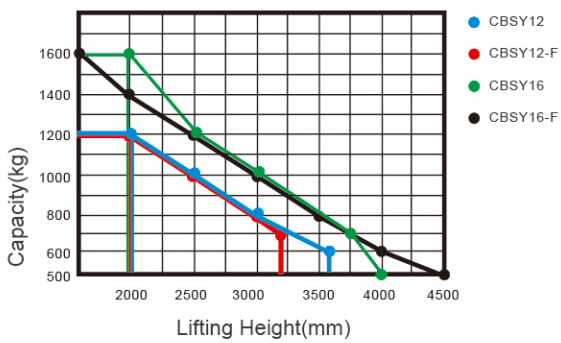

Model		CBSY06E	CBSY12E	CBSY12FE	CBSY16E	CBSY16FE
Type		Counterbalanced	Counterbalanced	Counterbalanced	Counterbalanced	Counterbalanced
Mast type		2-Stage STD	2-Stage STD	Full free 2-Stage	2-Stage STD	Full free 3-Stage
Load capacity	kg	600	1200	1200	1500	1600
Load center	mm	500	500	500	500	500
Wheel base	mm	794	1179	1179	1529	1529
Operating type		Walkie/Stand On	Walkie/Stand On	Walkie/Stand On	Walkie/Stand On	Walkie/Stand On
Wheels type		PU	PU	PU	PU	PU
Wheel quantity Driving wheel/Balance wheel/Bearing wheel		1/0/2	1/0/2	1/0/2	1/0/2	1/0/2
Standard lift height	mm	1400/2000/2500 /3000/3300	1400/2000/2500 /3000/3300/3600	2500/3000/3300	1400/2000/2500/ 3000/3300/3600/4000	3700/3900 /4200/4500
Lowered fork height	mm	55	55	55	55	55
Mast Lowed height	mm	1230/1580/1780 /2030/2130	1230/1580/1780 /2030/2130/2300	1830/2080/2180	1230/1580/1780/ 2030/2130/2330/2545	1817/1917 /2002/2102
Fork size(length/width/thickness)	mm	1070/100/40	1070/100/40	1070/100/40	1070/100/40	1070/100/40
Overall length	mm	2240/2660	2502/3012	2502/3012	2942/3362	2942/3362
Overall width	mm	1015	1015	1015	1015	1015
Min.Turning radius	mm	971	1352/1852	1352/1852	1808/2200	1808/2200
Min.Aisle width for pallets 800×1200	mm	2346/2822	2685/3175	2685/3175	3140/3520	3140/3520
Min.Aisle width for pallets 1000×1200	mm	2379/2844	2715/3195	2715/3195	3160/3538	3160/3538
Min.ground clearance	mm	80	80	80	80	80
Travel speed,laden/unladen	km/h	5/5.5	5/5	5/5	5/5	5/5
Lift speed,laden/unladen	mm/s	130/230	130/230	130/230	130/230	130/230
Lowering speed,laden/unladen	mm/s	130/230	130/230	130/230	130/230	130/230
Gradeability,laden/unladen	%	5/7	5/7	5/7	5/7	5/7
Drive motor / Lift motor /Steering motor	KW	AC1.5/DC3/DC0.15	AC1.5/DC3/DC0.15	AC1.5/DC3/DC0.15	AC1.5/DC3/DC0.15	AC1.5/DC3/DC0.15
Battery voltage	V	24	24	24	24	24
Battery capacity	Ah	270	270	270	270	270
Brake		Electromagnetic /Regenerative	Electromagnetic /Regenerative	Electromagnetic /Regenerative	Electromagnetic /Regenerative	Electromagnetic /Regenerative
Controller		CURTIS	CURTIS	CURTIS	CURTIS	CURTIS
Battery weight	kg	245	245	245	245	245
Service weight with battery	kg	1770	1800	1930	1610	1680

Reach Stacker CDYR12E/15E with EPS system

Capacity:1200/1500kg,Lifting Height:1400-4500mm

- Fork tilt,double oil cylinder more smoothly.
- Electro-hydraulic integrated control,multi-function handle.
- Electronic power steering system,light and low noise.
- Two-way magnetic valve,three drop speed mode.
- AC Driving system,no carbon brush,maintenance free.
- Electromagenetic,regenerative braking system.
- Automatic lifting limit,proximity switch,long lift.

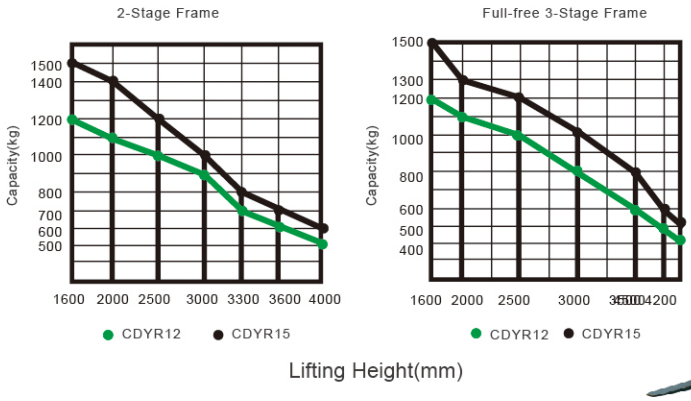

Model		CDYR12E/15E	CDYR12FE/15FE
Type		Reach	Reach
Mast type		2-Stage STD	Full free 3-Stage
Load capacity	kg	1200/1500	1200/1500
Load center	mm	500	500
Wheel base	mm	1332	1332
Wheels type		PU	PU
Wheel quantity		1/0/2	1/0/2
Driving wheel/Balance wheel/Bearing wheel			
Reach distance	mm	0-425	0-425
Standard lift height	mm	1400/2000/2500/3000/3300/3600/4000	3700/3900/4200/4500
Max extend height	mm	2235/2835/3335/3835/4135/4435/4835	4580/4780/5080/5380
Mast lowered height	mm	1490/1790/2040/2290/2440/2590/2790	1832/1898/1998/2098
Lowered fork height	mm	55	55
Fork size(length/width/thickness)	mm	1070/100/40	1070/100/40
Overall length	mm	2440/2896	2440/2896
Overall width	mm	1083	1083
Outside width between forks	mm	200-755	200-755
Tilt of fork(F/B)	mm	3/5	3/5
Min.Turning radius	mm	1596/2040	1596/2040
Min.Aisle width for pallets 800×1200	mm	3023/3456	3023/3456
Min.Aisle width for pallets 1000×1200	mm	3044/3472	3044/3472
Min.ground clearance	mm	60	60
Travel speed,laden/unladen	km/h	5/5.5	5/5.5
Lift speed,laden/unladen	mm/s	130/230	130/230
Lowering speed,laden/unladen	mm/s	130/230	130/230
Gradeability,laden/unladen	%	3/5	3/5
Drive motor / Lift motor /Steering motor	KW	AC1.5/DC3.0/DC0.15	AC1.5/DC3.0/DC0.15
Battery voltage	V	24	24
Battery capacity	Ah	280	280
Brake		Electromagnetic / Regenerative	Electromagnetic / Regenerative
Controller		CURTIS	CURTIS
Battery weight	kg	235	35
Service weight with battery	kg	2100	2200

Reach Stacker CQDY13E/14E with EPS system

Capacity:1300/1400kg, Lifting Height:3800-5500mm

- Scissor type fork.
- Electronic power steering system,light and low noise.
- Two-way magnetic valve,three drop speed mode.
- AC Driving system,no carbon brush,maintenance free.
- Electromagenetic,regenerative braking system.
- Lifting,reach,tilt automatic electric limit,delay motor and battery lift.
- Equipped with double oil cylinder,fork titl more smoothly.
- Moon Walk is STD,handle at any angle,the vehicle goes straight.

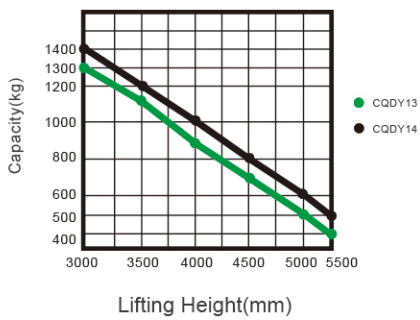

Model		CQDY13E	CQDY14E
Type		Reach(Tilt,Side shifter)	Reach(Tilt)
Mast type		3-Stage STD	3-Stage STD
Load capacity	kg	1300	1400
Load center	mm	500	500
Wheel base	mm	1478	1478
Operating type		Walkie	Walkie
Wheels type		PU	PU
Wheel quantity Driving wheel/Balance wheel/Bearing wheel		1/4	1/4
Reach distance	mm	0-550	0-550
Standard lift height	mm	3800/4000/4500/5000/5500	3800/4000/4500/5000/5500
Max extend height	mm	4991/5191/5691/6191/6691	4991/5191/5691/6191/6691
Mast lowered height	mm	1914/2081/2248/2415/2582	1914/2081/2248/2415/2582
Lowered fork height	mm	55	55
Fork size(length/width/thickness)	mm	1070/100/40	1070/100/40
Overall length	mm	2225	2225
Overall width	mm	1430	1430
Outside width between legs	mm	1270/1420/1470	1270/1420/1470
Inside width between legs	mm	1070/1220/1270	1070/1220/1270
Outside width between forks	mm	200-755	200-755
Distance shift fork side	mm	150	-
Tilt of fork(F/B)	Grad	4/3	4/3
Min.Turning radius	mm	1566	1566
Min.Aisle width for pallets 800×1200	mm	2135	2135
Min.Aisle width for pallets 1000×1200	mm	2315	2315
Min.ground clearance	mm	50	50
Travel speed,laden/unladen	km/h	3.5/4	3.5/4
Lift speed,laden/unladen	mm/s	130/230	130/230
Lowering speed,laden/unladen	mm/s	130/230	130/230
Gradeability,laden/unladen	%	3/5	3/5
Drive motor / Lift motor /Steering motor	KW	AC1.5/DC3.0/DC0.15	AC1.5/DC3.0/DC0.15
Battery voltage	V	24	24
Battery capacity	Ah	345	345
Brake		Electromagnetic / Regenerative	Electromagnetic / Regenerative
Controller		CURTIS	CURTIS
Battery weight	kg	300	300
Service weight with battery	kg	2420	2400

Yi-lift Material Handling Equipment Co.,Ltd.

Add: NO. 396 Changhong Road, Wujing District, Changzhou, P.R. China

Tel: 0086-510-68937216, 82305022, 66030831, 68937214

Fax: 0086-510-82730160

E-mail: sales@yi-lift.com

Http: //www.yi-lift.com www.yiliftmhe.com